MODEL R Nº 40G

SERVICE PART Nº	COMPONENT PART Nº'S	NO. REQ'D
10174 BODY	10173 1311	1 2
10096 COVER	10094 6333-G	1 1
10172 HOUSING	11384-A 10926	1 1
10027 SEAL & SEAT	10523 10926	1 1

MAJOR REPAIR KIT # 12936 (K)
MINOR REPAIR KIT # 10997 (L)

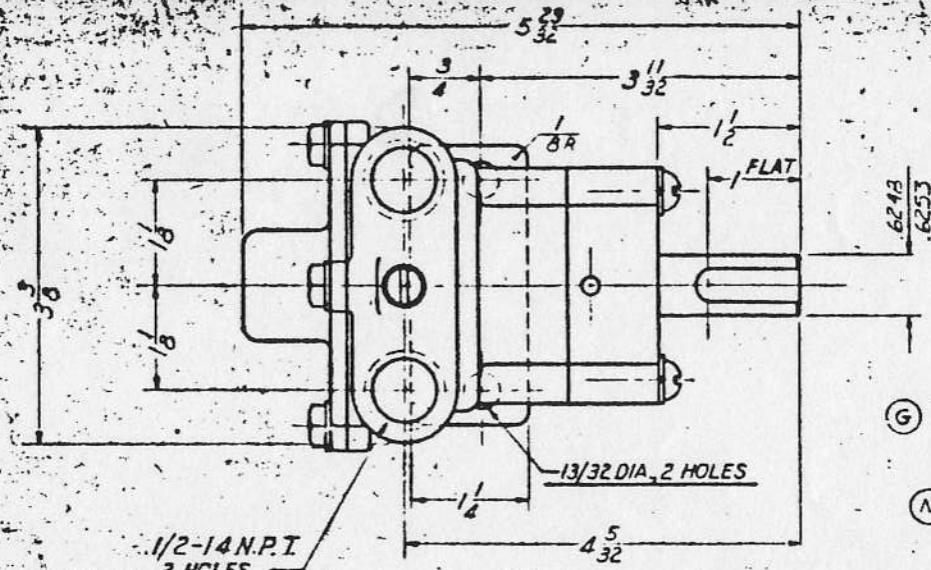

NOTES:

(G) 1. USE JIFFY SHIPPING BAG NO 2 & CARTON 2 FOR PACKAGING PUMP ASSY.
2. PASTE CARTON LABEL NO. 12209 TO CARTON END PROPERLY MARKED
(M) 3. INCLUDE SERVICE BULLETIN NO. 11856

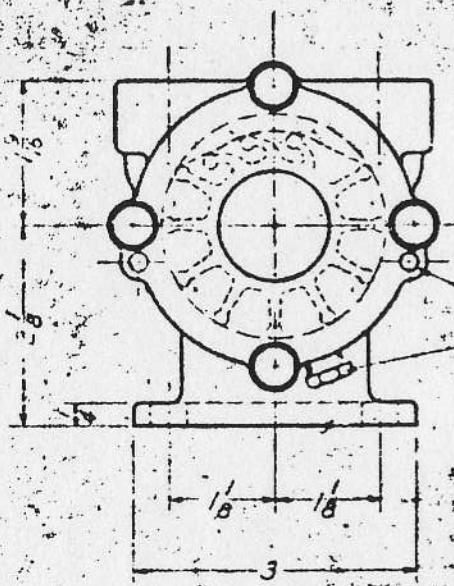

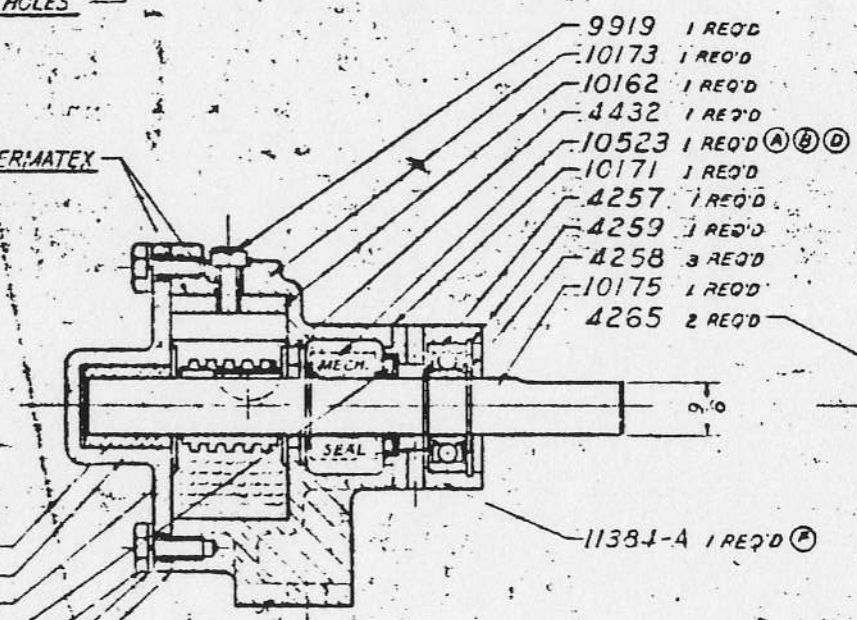

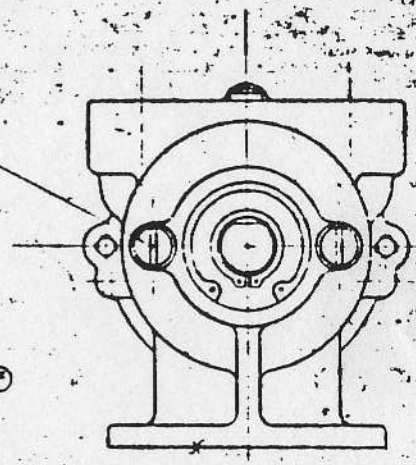

FLOW CURVE "S8007F"

CAPACITY
10 G.P.M. @ 1750 R.P.M. MAX.

(J) SAME AS R40G ASSY EXCEPT
10103 GASKET REMOVED 1 REQ'D.
12594 GASKET ADDED 1 REQ'D

R40G-1

M	[illegible] BULLETIN [illegible]	[illegible]	
L	10997 KIT REVISED	[illegible]	
K	12936 KIT ADDED	[illegible]	
J	R40G-1 ASSY ALTERED	[illegible]	
H	10997 KIT REVISED	[illegible]	
G	NOTES & PARTS ADDED	[illegible]	
F	WAS Nº 10173 HOUSING	[illegible]	
E	Nº 10926 SEAT ADDED	[illegible]	
D	WAS Nº 7159 SEAL	[illegible]	
C	SUB ASSY Nº 10997 ADDED	[illegible]	
B	WAS SEAL Nº 3939	[illegible]	
A	WAS SEAL Nº 10164	[illegible]	

SHERWOOD BRASS WORKS
DETROIT, MICHIGAN

TITLE: IMPELLER PUMP ASSY.

SEE DETAILS

MODEL R Nº 40G