P1730F

PARTS LIST

ITEM	DESCRIPTION	REQ'D	PART NO.	
1	SHAFT	1	19616	
2	EXT. RET. RING	3	15952	
3	O-RING	1	19712	
4	HOUSING	1	21523	
5	END PLATE	1	16047	
6	RD. HD. PIN	1	18442	
7	IMPELLER	1	17000	
8	CAM (.27)	1	18271	
9	CAM SCREW	1	19714	
10	COVER PLATE	1	18742	
11	LOCK WASHER	11	21573	
12	M8 X 1.25 (20 mm)	7	19626	
13	LIP SEAL	1	19674	
14	ADAPTER	1	21985	
15	BALL BEARING	2	15951	
16	KEY	1	19667	
17	MECH. SEAL	1	15954	
18	SEAL SEAT	1	15953	E
19	SPACER	1	19615	
20	FLAT WASHER	1	15959	
21	O-RING	1	15945	
22	GEAR ~ EXT. DRIVE	1	22495	D
23	FLAT WASHER	2	19614	
24	M8 X 1.25 FLANGE	4	19708	
25	RUBBER CAP	1	19210	
26	DRAIN PLUG	2	339	
27	HEX NUT	1	19730	
28	M8 X 1.25 (25mm)	4	21484	
29	PORT ~ 1.75 O.D.	1	21987	
30	PORT ~ 2 O.D.	1	21988	
31	BRACKET	1	21373	A
32	O-RING	2	21525	
33	SEAL & SEAL ASS'Y	ITEMS 17 & 18	15955	
34	PIN & ENDPL. ASS'Y	ITEMS 5 & 6	18441	
35	O-RING & CAM SCREW	ITEMS 8 & 9	19715	
36	TAPER PLUG	1	21321	
37	TAPER PLUG	1	18459	
38	TUBE CONTAINER	1	14120	
39	INSERT	4	21583	
40	PAD	6	14122	
41	MINOR SERVICE KIT	S	21592	
42	MAJOR SERVICE KIT	S	21587	
43	GASKET	1	21570	
44	MID SERVICE KIT	S	21633	
45				

NOTE:

1). TORQUE BOLTS 18 LB-FT

2). APPLY THIN FILM OF GREASE (NLGI NO. 0) AROUND SHAFT BETWEEN LIP SEAL AND FIRST RET. RING.

E 3). GEAR MUST HAVE CUMMINS # 3931338

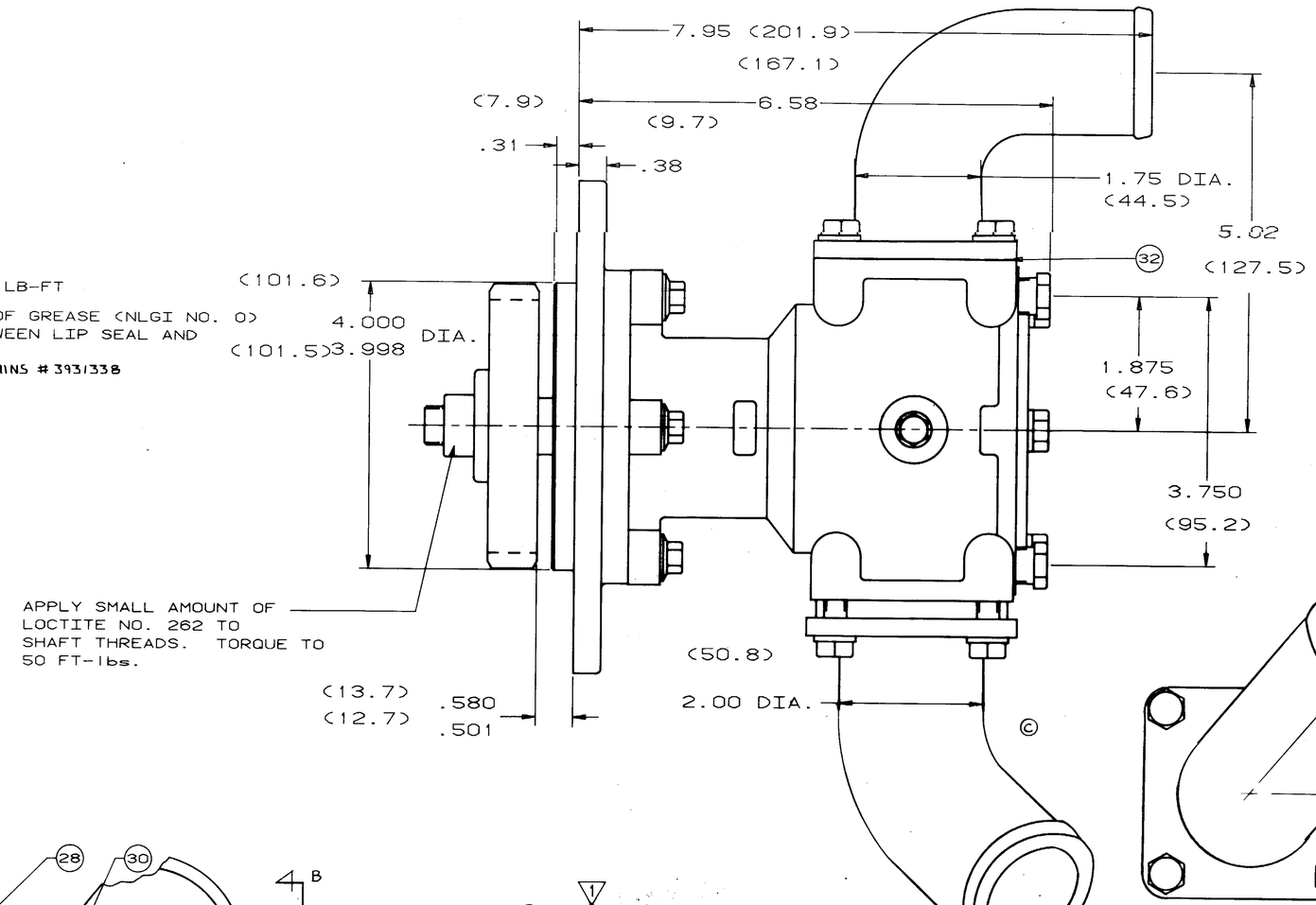

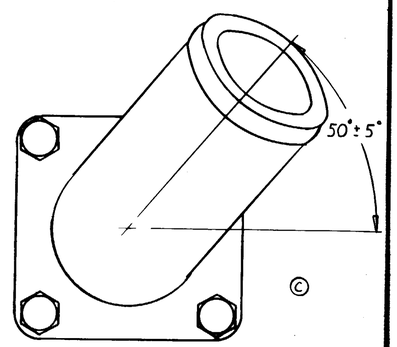

VIEW B-B

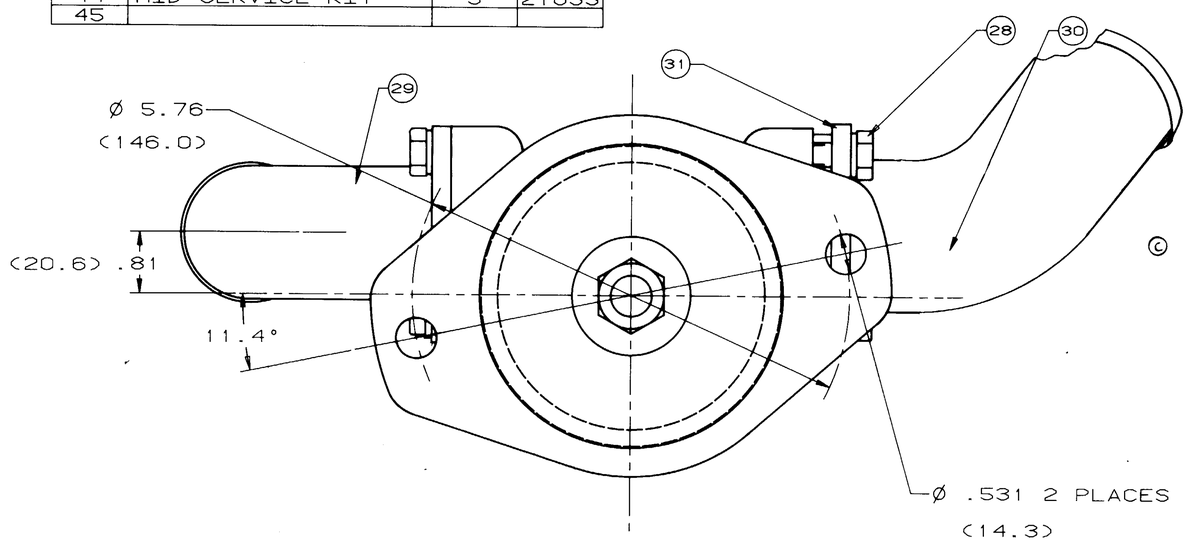

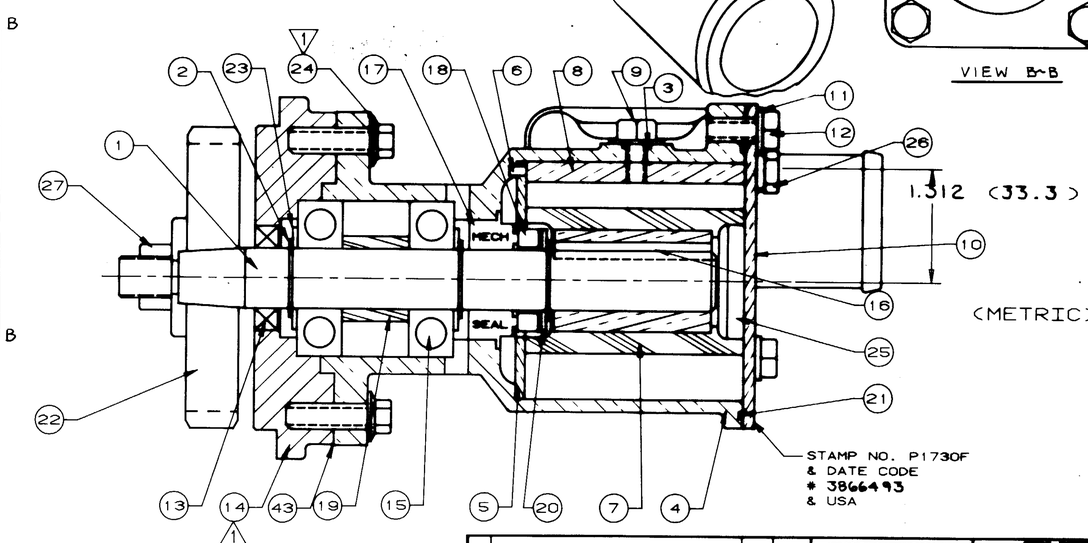

(METRIC)

(4) INSERT X (12) CELLS/INSERT=(48) PUMPS/PALLET

CAD FILE: p1730

REV	DESCRIPTION	APPR	DATE
E	ADDED NOTE	TLG	4-2-96
D	WAS 19885	TLG	3-22-96
C	ROTATED PORT	TLG	3-22-96
B	WAS 19885	TLG	11-7-95
A	WAS 2 21373	TLG	7-20-95

UNLESS OTHERWISE SPECIFIED
CAST DIMENSIONS ± .02
FILLETS & RADII .06
FINISH STOCK .07
MACHINING TOLERANCE, INCHES
XX ± .01, XXX ± .005
SURFACE ROUGHNESS
ANGLES ± 0° 30'
CORNER BREAKS .01 MAX.

FLATNESS .0015 IN/IN
SQUARENESS .0015
CONCENTRICITY .002
ROUNDNESS .0005
RUNOUT .002

SHERWOOD
A DIVISION OF IMPERIAL CORPORATION

DRAFTSMAN	DATE	CHECKER	DATE	ASSY NO
TLG	4-24-95			

TITLE: RUBBER IMPELLER PUMP

MATERIAL: SEE DETAILS

DWG. NO: P1730F

DAYTON BLUEPRINT CO. 373442