P1719

PARTS LIST

ITEM	DESCRIPTION	REQ'D	PART NO.
1	SHAFT	1	19345
2	EXT. RET. RING	3	15952
3	FLAT WASHER	2	19614
4	HOUSING	1	19732
5	END PLATE	1	16047
6	RD. HD. PIN	1	18442
7	RUBBER IMPELLER	1	17000
8	CAM	1	18271
9	CAM SCREW	1	19714
10	COVER PLATE	1	18742
11	LOCKWASHER	3	15944
12	M8×1.25 HEX CAPSCREW	3	19626
13	LIP SEAL	1	19674
14	FLANGE MOUNTING ADAPTER	1	19700
15	BALL BEARING	2	15951
16	KEY	1	19667
17	MECH. SEAL	1	15954
18	SEAL SEAT	1	15953
19	SPACER	1	19615
20	FLAT WASHER	1	15959
21	O-RING	1	15945
22	O-RING	1	19712
23	M8×1.25 HEX FLANGE HD. BOLT	4	19708
24	RUBBER CAP	1	19210
25	DRAIN PLUG	2	339 (B)
26	KEY	SERVICE	19209

ITEM	DESCRIPTION	REQ'D	PART NO.
32	SEAL & SEAT ASS'Y	ITEM 17 & 18	15955
33	END PLATE-PIN ASS'Y	ITEM 5 & 6	18441
34	MINOR SERVICE KIT	ITEM 7, 21, 24, & 26	19725 (A)
35	MAJOR SERVICE KIT	ITEM 2, 3, 7, 8, 11-13, 15, 20, 21, 24, 26, 32 & 33	19726
36	CAM SCREW & O-RING ASS'Y	ITEM 9 & 22	19715
37	PLASTIC BAG	1	18207 (C)

▽ NOTE:
DEGREASE BOLTS PRIOR TO INSTALLATION. USE LOCTITE PRIMER #25556 FOLLOWED BY LOCTITE #262. TORQUE BOLTS TO 18 FT-lb.

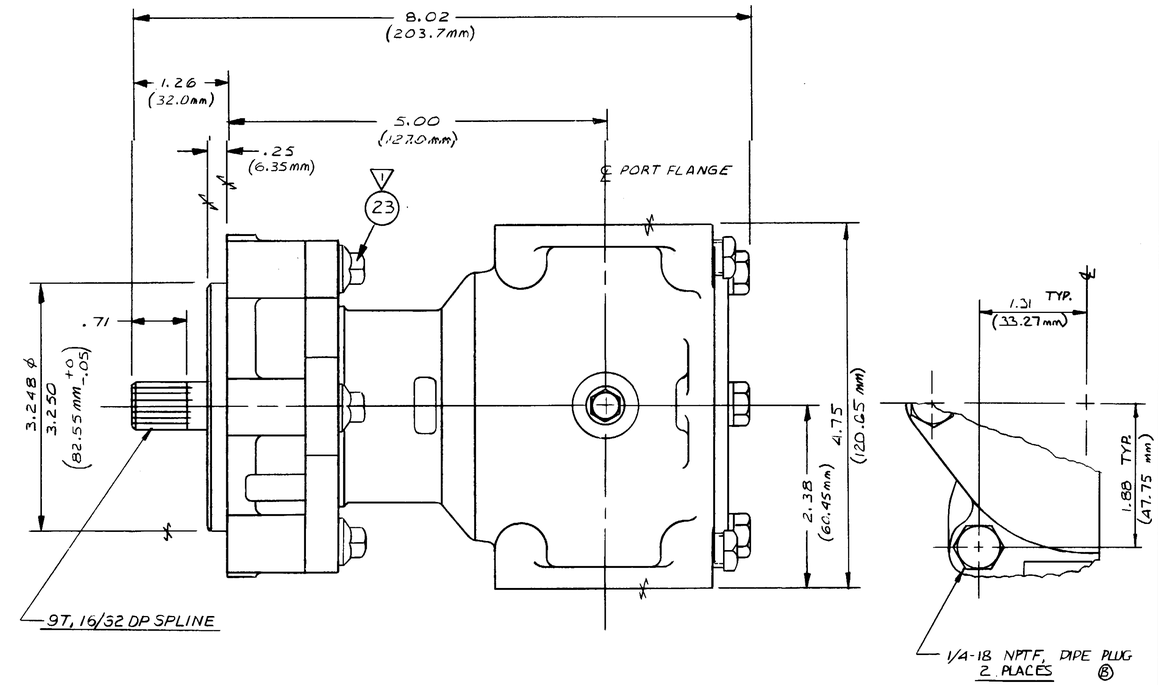

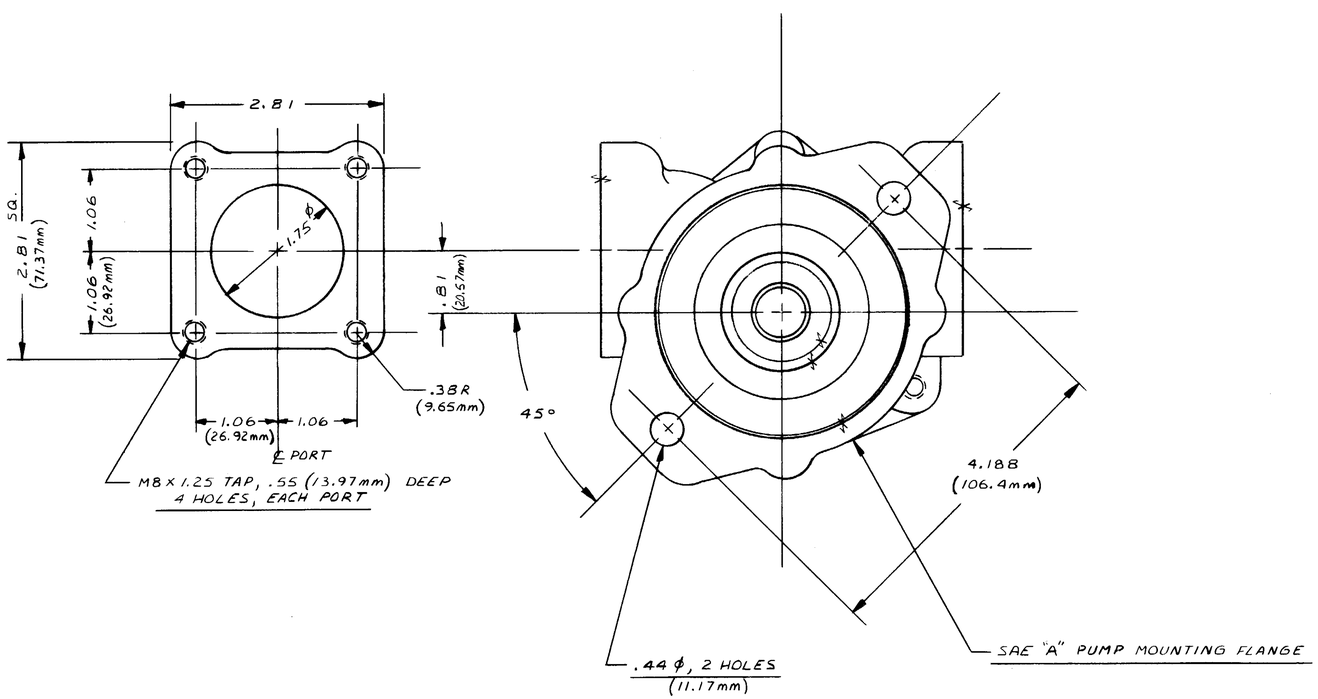

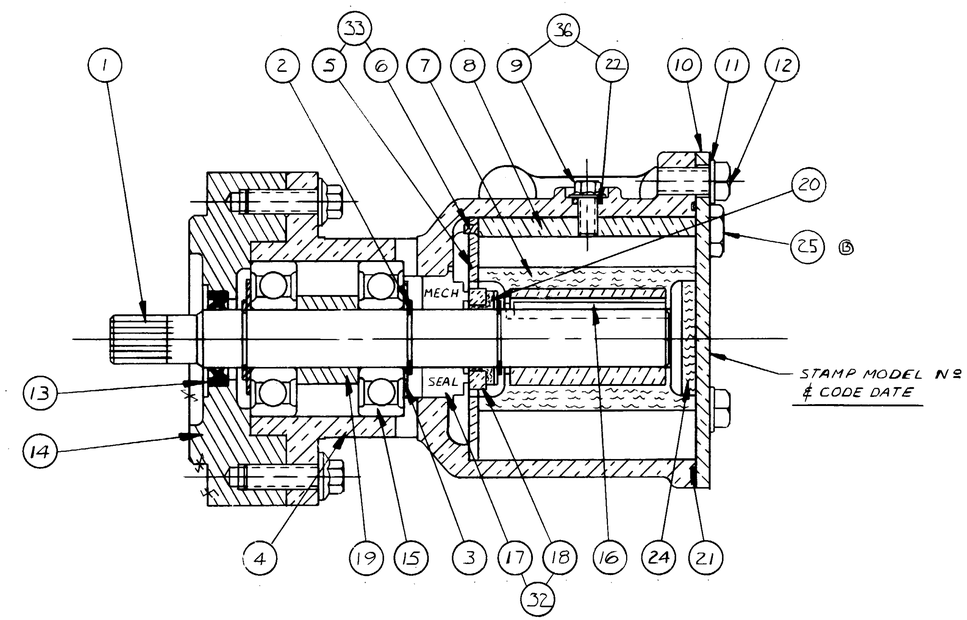

REV.	DESCRIPTION	APPR	DATE
C	ADDED PLASTIC BAG	T.L.G.	11-2-93
B	ADD DET. 25 - DRAIN PLUGS	KRS	11-30-92
A	SERVICE KITS REVISED	KB	2-19-92

UNLESS OTHERWISE SPECIFIED
CAST DIMENSIONS ± .02
FILLETS & RADII .06
FINISH STOCK .07
MACHINING TOLERANCE, INCHES
XX ± .01, XXX ± .005
SURFACE ROUGHNESS √
ANGLES ± 0° 30'
CORNER BREAKS .01 MAX.
PARALLISM .001
FLATNESS .001
SQUARNESS .001
CONCENTRICITY .001
ROUNDNESS .0002
RUNOUT .001

SHERWOOD
A DIVISION OF HYPRO CORPORATION
6331 E. JEFFERSON AVE. • DETROIT, MICHIGAN 48207

DRAFTSMAN	DATE	CHECKER	DATE	PROJ. NO
K.B.	10-23-91	AVB	11/27/91	1029

TITLE: RUBBER IMPELLER PUMP

MATERIAL: SEE DETAILS

DWG. NO. P1719

NPS 1845 280 5-87 3147F