D-10

CLOCKWISE ROTATION
(VIEW FROM PULLEY END)

SERVICE PART NO.	COMPONENT PART NO'S	NO. REQD.
10577	12314	1
SEAL & SEAT	10389	1

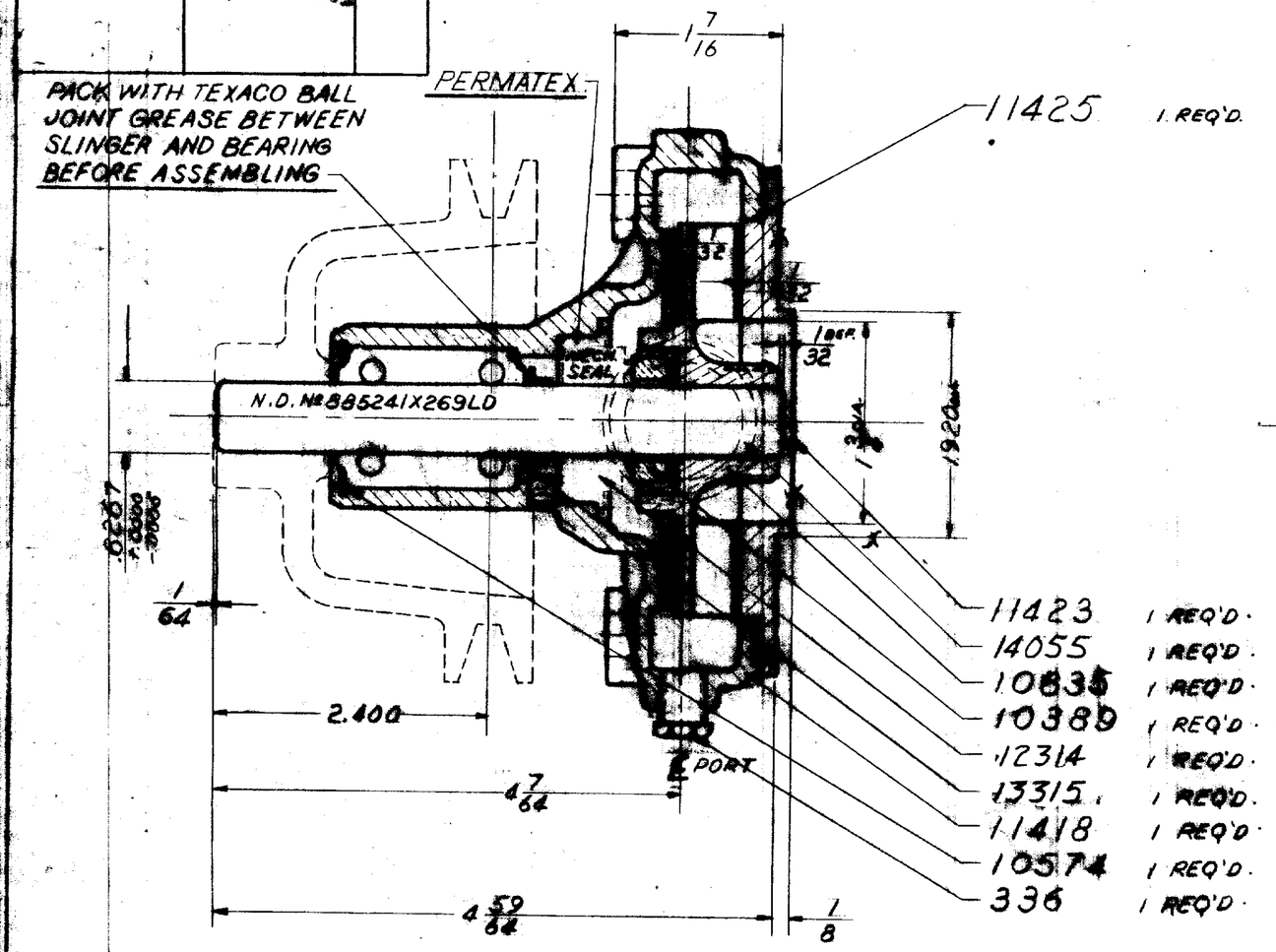

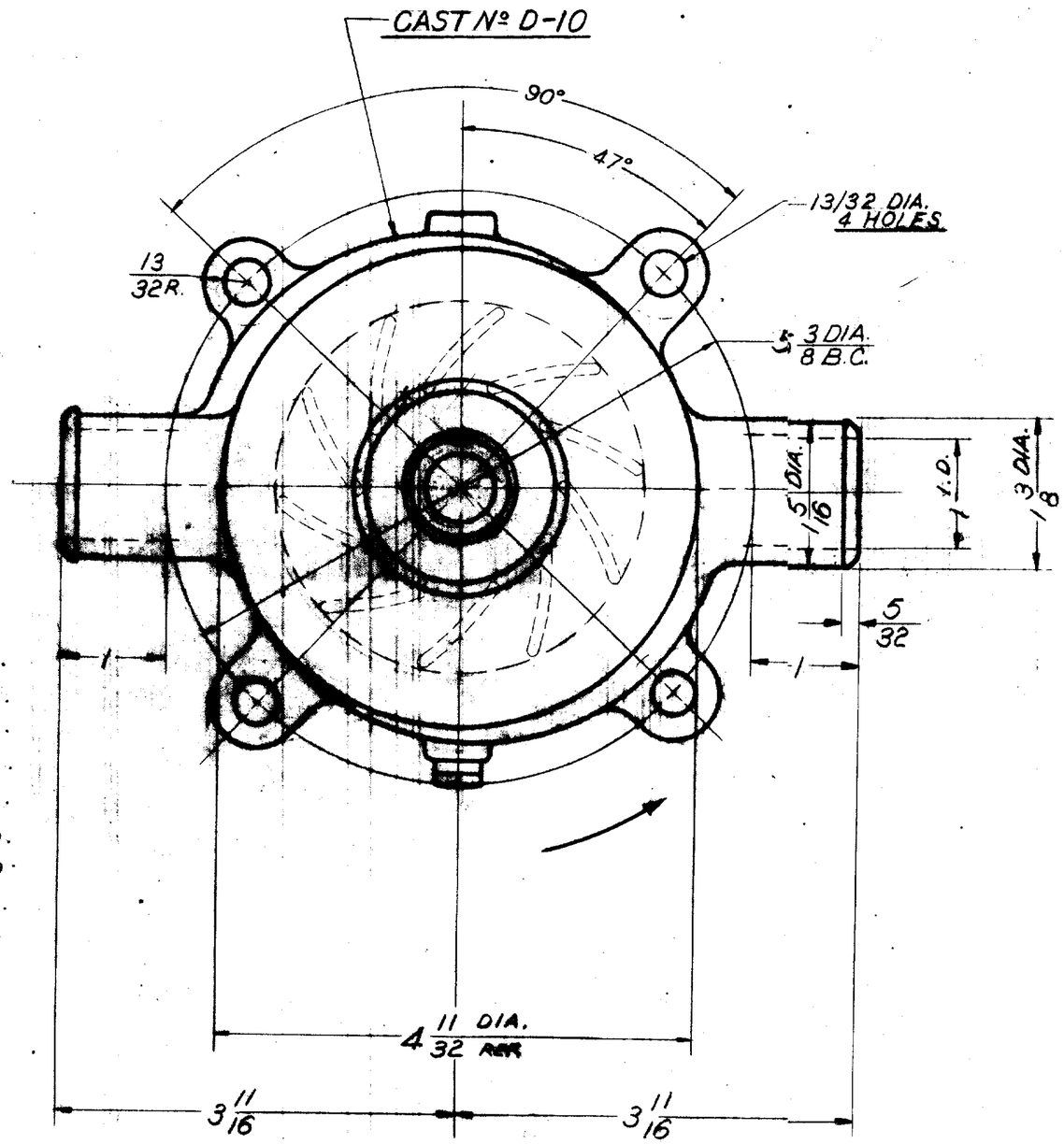

CAPACITY
30 G.P.M. EACH PORT
15 P.S.I. @ 4000 R.P.M.

SHIPPING:
CARTON 17636 © 1 REQ'D
LABEL 12209 1 REQ'D
JIFFY BAG # 5, 17653 1 REQ'D

CURVE NO. 68009

PROJECT Nº ACC-59

REV.	DESCRIPTION		DATE
C	CARTON & LABEL ADDED	SH	4/3/69
B	14055 WAS 11420		
A	NOTE REMOVED		

DO NOT SCALE DRAWING
PLUS OR MINUS .005 ... ON FRACTIONAL DIMENSIONS. ALL HOLES AND SHARP CORNERS TO BE DURED .005 TO .010 CORNERS AND FILLETS TO BE DESIGN UNLESS OTHERWISE SPECIFIED.

SHERWOOD
A DIVISION OF HYPRO CORPORATION
[illegible] JEFFERSON AVE., DETROIT, MICHIGAN [illegible]

TITLE: CENTRIFUGAL PUMP ASS'Y (CIRC'G)

MATERIAL: SEE DETAILS

SCALE	FULL	REQ'D.	
DRAWN	B.P.	DATE	1-10-68
CHECKED	A.V.B.	DATE	1-11-68
APPROVED		REF:	P-10580

PART NO. D-10