HOME

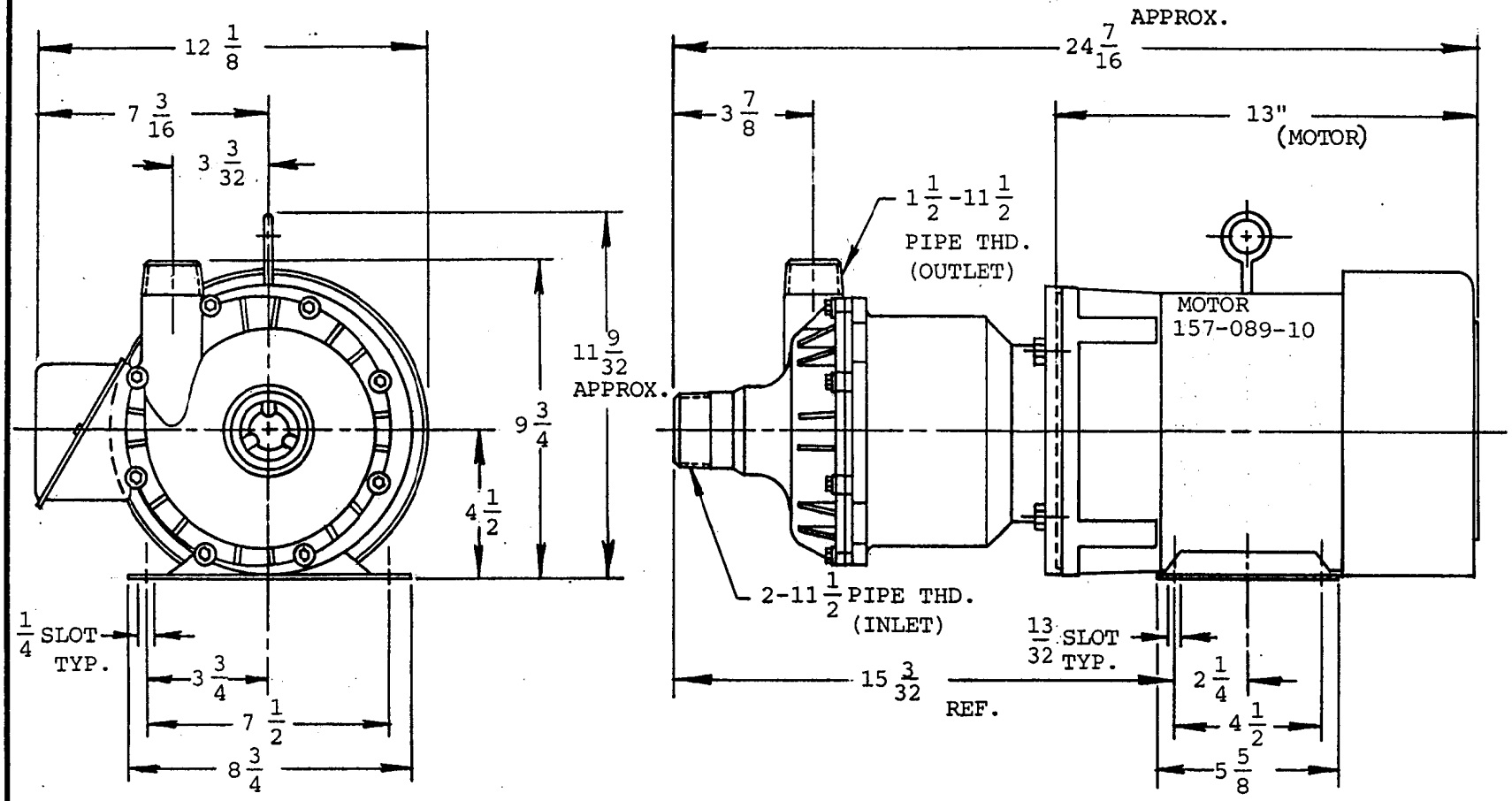

QTY.	USED ON ASSEM.

MARCH MFG. INC.

1819 PICKWICK AVE. GLENVIEW, IL.

PART NAME	PUMP ASSEMBLY	TE-8C-MD-3PH-3HP-w/SFM TE-8K-MD-3PH-3HP-w/SFM	
MOTOR: MARATHON - TEFC - 182 FRAME 208-230/460 60HZ		SCALE 3/16=1"	QTY. REQ. 1
FINISH		DRAWN JT/HZ	DATE 1-24-91
UNLESS OTHERWISE NOTED TOLERANCE ON FRACTIONS ± 1/64 TOLERANCE ON DECIMALS ± .005		CHECKED	
		APPROVED	
PART NUMBER	157 SERIES		

ASSEMBLY No.	MODEL
157-008-05	(TE-8C-MD 3PH 3HP)- STEEL FRAME MOTOR
157-008-06	(TE-8K-MD 3PH 3HP)- STEEL FRAME MOTOR

THIS DOCUMENT DISCLOSED SUBJECT MATTER IN WHICH MARCH MFG. INC. HAS PROPRIETARY RIGHTS. NEITHER RECEIPT NOR POSSESSION THEREOF CONFERS OR TRANSFER ANY RIGHT TO REPRODUCE OR DISCLOSE THE DOCUMENT, ANY PART THEREOF, ANY INFORMATION CONTAINED THEREIN, OR ANY PHYSICAL ARTICLE OR DEVICE OR TO PRACTICE ANY METHOD OR PROCESS, EXCEPT BY WRITTEN PERMISSION FROM OR WRITTEN AGREEMENT WITH MARCH MFG. INC.