HOME

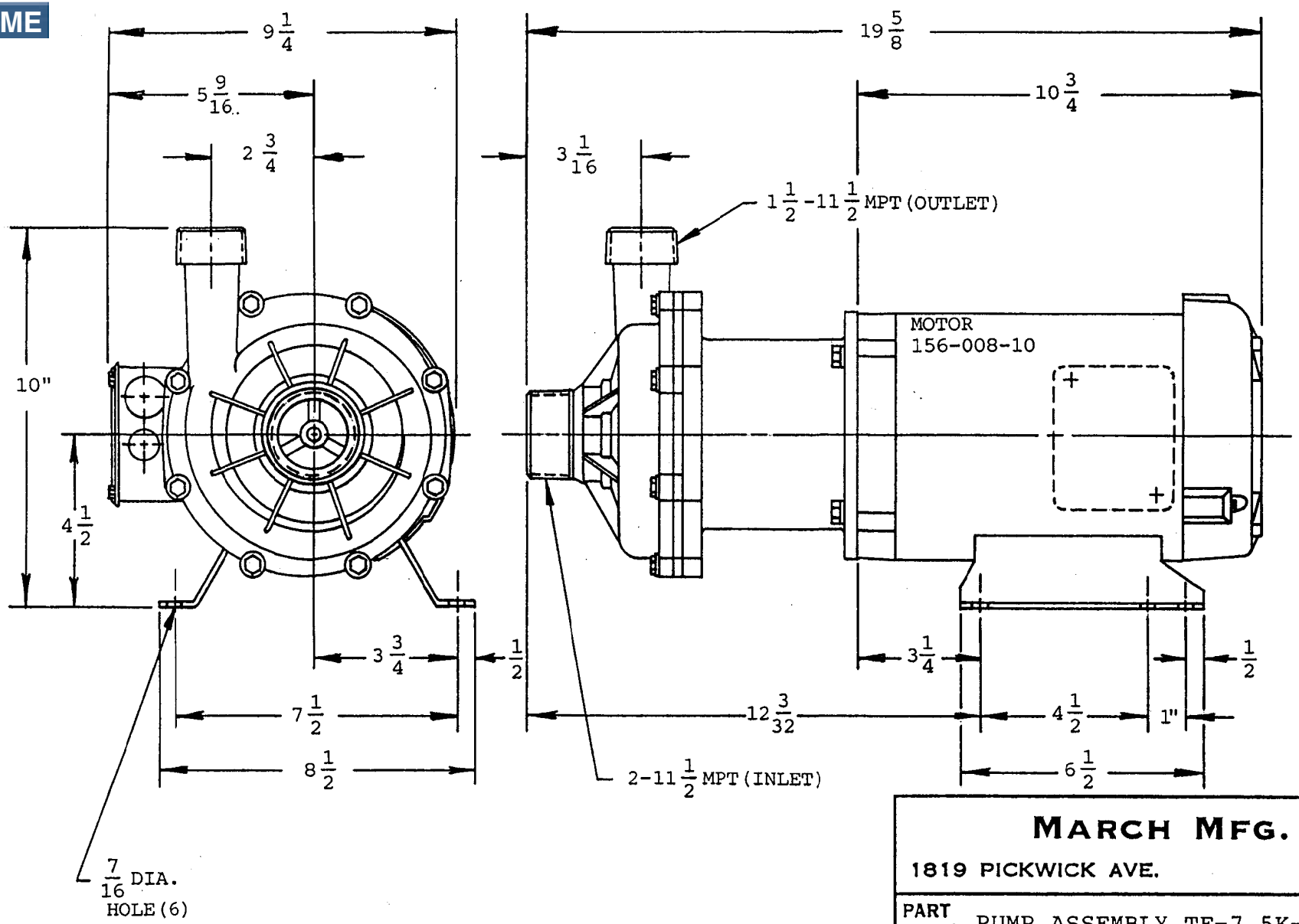

(B)	REDRAWN 6-30-94 J.T.

QTY.	USED ON ASSEM.

MARCH MFG. INC.

1819 PICKWICK AVE. GLENVIEW, IL.

PART NAME	PUMP ASSEMBLY TE-7.5K-MD-3PH-2HP	
MOTOR:	MARATHON - TEFC - 182 FRAME 208-230/460V 60HZ 190/380V 50HZ	SCALE 1/4"=1" / QTY. REQ. 1
FINISH		DRAWN JT/HZ / DATE 6-30-94
UNLESS OTHERWISE NOTED TOLERANCE ON FRACTIONS ± TOLERANCE ON DECIMALS ±		CHECKED / APPROVED
PART NUMBER	156 SERIES	

MODEL	ASSEMBLY No.
TE-7.5K-MD-3PH-2HP	156-001-01

THIS DOCUMENT DISCLOSED SUBJECT MATTER IN WHICH MARCH MFG. INC. HAS PROPRIETARY RIGHTS. NEITHER RECEIPT NOR POSSESSION THEREOF CONFERS OR TRANSFER ANY RIGHT TO REPRODUCE OR DISCLOSE THE DOCUMENT, ANY PART THEREOF, ANY INFORMATION CONTAINED THEREIN, OR ANY PHYSICAL ARTICLE OR DEVICE OR TO PRACTICE ANY METHOD OR PROCESS, EXCEPT BY WRITTEN PERMISSION FROM OR WRITTEN AGREEMENT WITH MARCH MFG. INC.