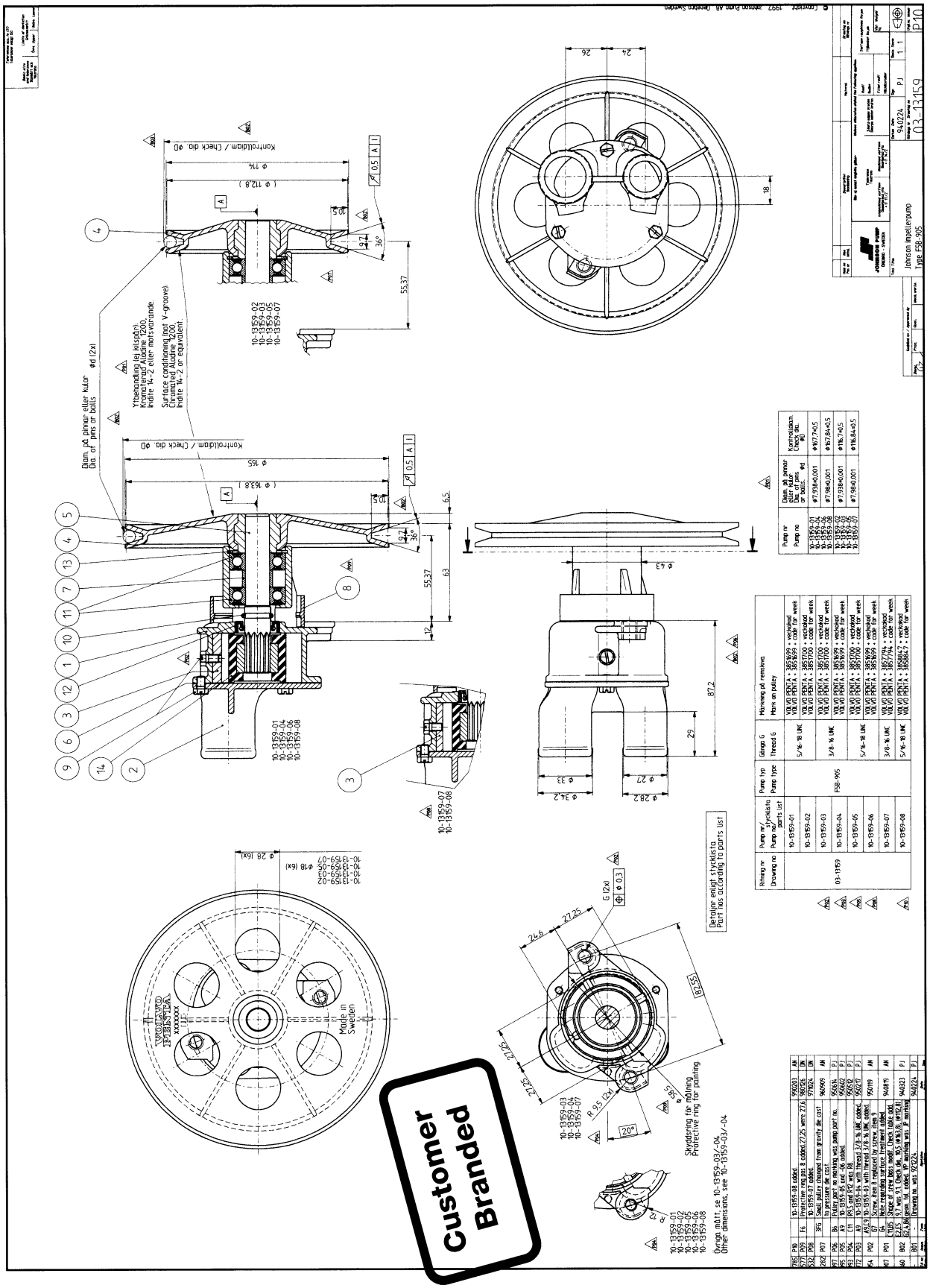article number 10-13159 pump F5B-905