JABSCO®

Depco Home

Model 4732-SERIES

VACUUM SWITCH

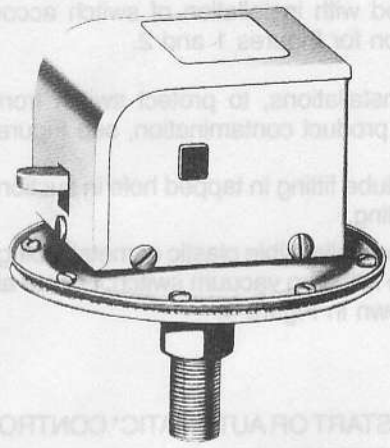

MODEL 4732-0000

⚠ SWITCH WARNING

SWITCH CAN SPARK, EXPLOSION & DEATH CAN OCCUR.

DO NOT USE WHERE FLAMMABLE VAPORS ARE PRESENT.

APPLICATIONS

Emptying or transferring non-flammable liquids from drums and carboys, remote bilge pumping, dewatering.

WARNING: SWITCH IS NOT IGNITION PROTECTED. DO NOT USE IN BILGE AREA OF VESSELS WITH GASOLINE ENGINES OR EQUIPMENT AS EXPLOSION MAY RESULT CAUSING INJURY OR DEATH.

MODEL 4732-0000 SWITCH RATINGS	
Power Supply	**Motor HP**
3 Phase 110 Vac	2 hp
3 Phase 220 Vac	3 hp
1 Phase 110 Vac	2 hp
1 Phase 220 Vac	3 hp
12/24/32/115/230 Vdc	1/2 hp

GENERAL INFORMATION

The vacuum switch is an electrical device wired into the power circuit to an electric motor, gas engine or electric clutch. When the switch is connected to the suction side of a pump, it senses the break in vacuum if the pump runs out of liquid. The break in vacuum causes the switch to open the circuit, shutdown the motor, engine, or deactivate the clutch.

The vacuum switch is generally installed in a pumping system when transferring or pumping out a limited amount of liquid and the pump cannot be tended at all times. The switch provides automatic shutoff in case the pump runs dry to help prevent damage to the pump. While the switch is manually restarted normally, it is possible with electric motor or electric clutch installations to wire a momentary switch, float or liquid level device across the terminals of the vacuum switch to reactivate the system remotely or automatically.

The switch case and diaphragm enclosure are cad-plated or enamel-coated steel and could be subject to corrosive attack from chemicals or chemical fumes.

The switch is normally mounted on the inlet side of the pump, between the pump and liquid source. The switch contains a spring loaded diaphragm sensitive to a vacuum of not less than 2-½" Hg (mercury).

When the gasoline engine version of the vacuum switch is installed, it provides automatic shutoff and manual start only.

If a vacuum switch is used with a pump handling corrosive fluids, the switch life may be extended by mounting the switch remotely and connecting the switch to the pump with stainless steel tubing or hard plastic tubing. All connections must be AIRTIGHT and non-collapsible (Figure 4).

VARIATIONS AVAILABLE

MODELS	APPLICATIONS
4732-0000	To be used with electrical motor pump units and electro-magnetic clutch units.
4732-0010	To be used with gas engine pump units.

Fig. 1

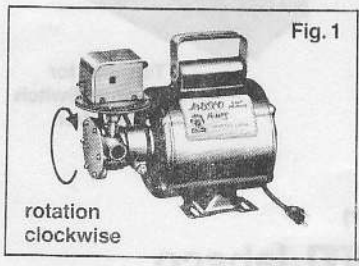

Fig. 2

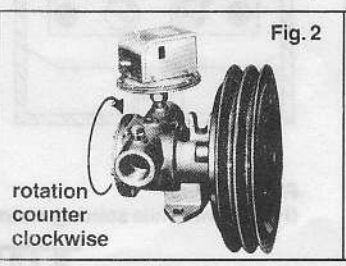

Fig. 3

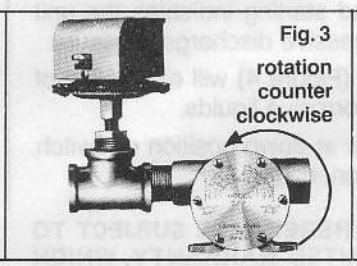

Fig. 4

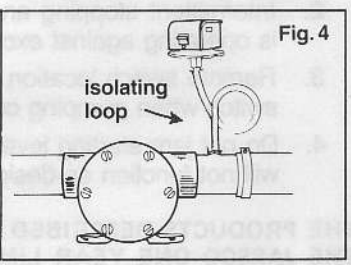

TYPICAL INSTALLATIONS

For pump models furnished with 1/4" pipe tap in suction port, refer to Figures 1 and 2.

1. Remove pipe plug from port.
2. Place a small amount of sealing compound or TFE tape on the nipple threads; screw into tapped holes in the switch and pump port until nipple is securely seated. Use the hex nut on the switch for tightening.
3. Remove the single screw below the "restart lever" and remove switch cover.
4. Following the wiring diagram applicable to system being used, connect wiring and replace switch cover.
5. To operate, hold down restart lever until pump holds its prime, release and pump will continue to operate until liquid source is depleted or power is disconnected.

For models not furnished with pipe tap in suction port, refer to Figures 3 and 4.

1. Using sealing compound or TFE tape, install run of pipe tee to pump inlet port with a short nipple.
2. Install reducer bushing in branch of pipe tee, if required, to use 1/4" short nipple for vacuum switch conneciton.
3. Proceed with installation of switch according to instruction for Figures 1 and 2.

For remote installations, to protect switch from corrosive fluids or food product contamination, see Figure 4.

1. Install tube fitting in tapped hole in suction port or tee port fitting.
2. Use non-collapsible plastic or metal tubing to connect to tube fitting on vacuum switch. Locate above pump as shown in Figure 4.

WIRING DIAGRAMS

ELECTRIC MOTOR AND CLUTCH UNITS
Vacuum Switch Kit # 4732-0000

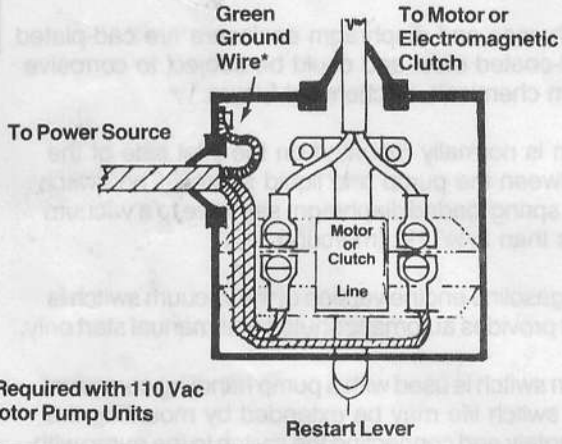

* Required with 110 Vac Motor Pump Units

REMOTE RESTART OR AUTOMATIC* CONTROL SWITCH

On electric clutch or motor pump units, a remote restart switch may be installed to eliminate the need to manually activate restart lever.

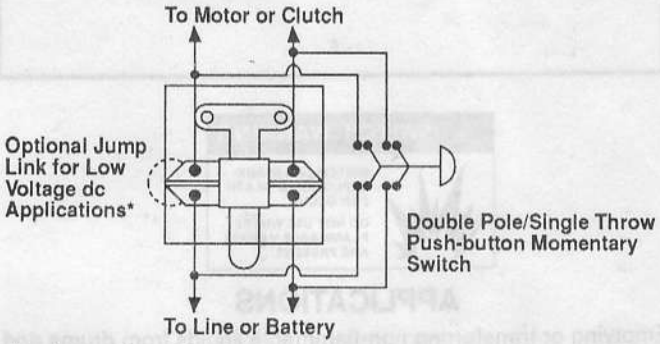

* For low voltage dc clutch or motor pump units, a jump link may be used across one side of the switch to allow the use of a single pole/single throw momentary switch or automatic float switch.

SERVICE TIPS
SPECIAL ATTENTION

1. Constant vibration of the starting lever indicates:
   A. An air leak. This will usually show up when the pump is first started. All suction lines should be checked for loose connections. Make sure all threaded connections are installed with a sealing compound.
   B. Worn impeller. Replace impeller and check for wear of end cover, cam and wearplate.
2. Intermittent stopping and starting indicates the unit is operating against excessive discharge pressure.
3. Remote switch location (Figure 4) will extend life of switch when pumping corrosive liquids.
4. Do not jam starting lever in down position or switch will not function as designed.

GASOLINE ENGINES
Vacuum Switch Kit #4732-0010

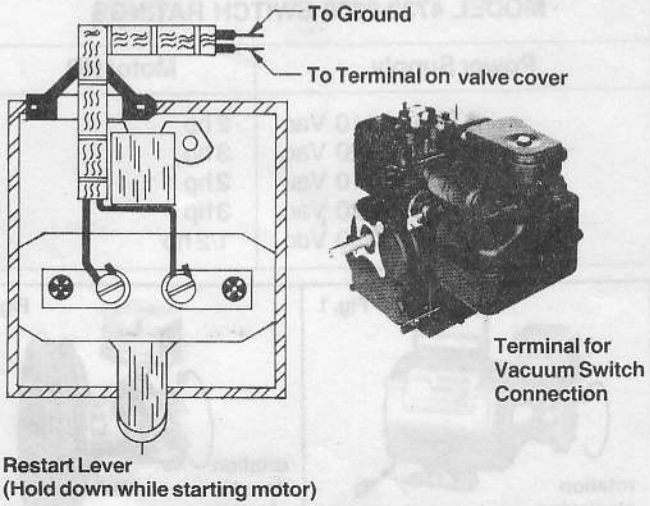

THE PRODUCTS DESCRIBED HEREIN ARE SUBJECT TO THE JABSCO ONE YEAR LIMITED WARRANTY, WHICH IS AVAILABLE FOR YOUR INSPECTION UPON REQUEST.

ITT Jabsco
ITT Fluid Technology Corporation
1485 Dale Way, P.O. Box 2158, Costa Mesa, Ca 92628-2158; Tel: (714) 545-8251; Fax: (714) 957-0609
Bingley Road, Hoddesdon, Hertfordshire EN11 OBU, England; Tel: 0992-467191; Tlx: 26351 G; Fax: 0992-467132

© Copyright 1993, ITT Corporation

Printed in U.S.A.

All Rights Reserved

Form: 43000-0024
Rev. 2/93