ALL DIMENSIONS IN MILLIMETRES

KEY	DESCRIPTION	PART NUMBER	QTY
1	PUMP ASSEMBLY	5AM -1101	1
2	PULLEY	54. -0000	1
3	WASHER	08 -091F	1
4	SPRING WASHER	08 -091F	1
5	NUT	07 -091F	1
6	SCREW	00 -195F	1
7	BRACKET	54 -0000	1

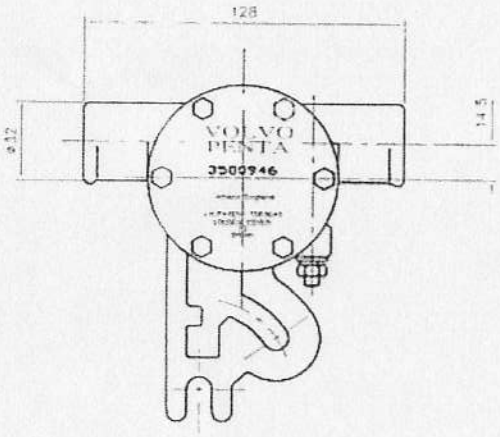

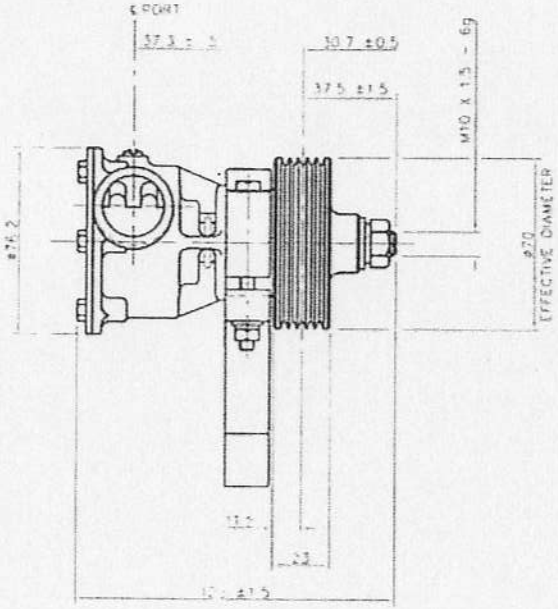

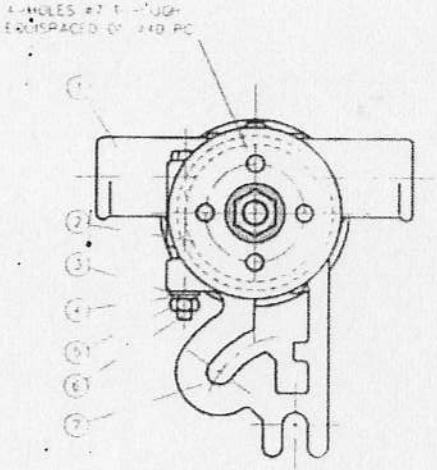

ISSUED
30 OCT 2003
ENG. DEPT.

NOTICE

PROJECTION

Jabsco

INSTALLATION PMP PUMP

A1

Depco Home