ALL DIMENSIONS IN MILLIMETRES

KEY	DESCRIPTION	QTY.
1	END COVER SCREW	5
2	ENDCOVER	1
3	O–RING	1
4	SPLINE PLUG	1
5	IMPELLER	1
6	CAM	1
7	CAM SCREW	1
8	BODY	1
9	WEAR PLATE	1
10	MECHANICAL SEAL	1
11	SEAL CUP	1
12	CUP RUBBER	1
13	SLINGER	1
14	LIPSEAL	1

KEY	DESCRIPTION	QTY.
15	BEARING	1
16	BEARING HOUSING	1
17	CIRCLIP	2
18	BEARING	1
19	KEY	1
20	SHAFT	1
21	HEX HEAD SCREW	4
22	SPRING WASHER	4
23	O–RING	1
24		
25		
26		
27		
28		

ASSEMBLY INSTRUCTIONS 22029

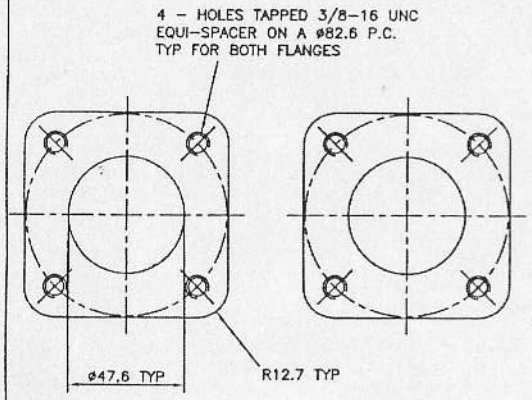

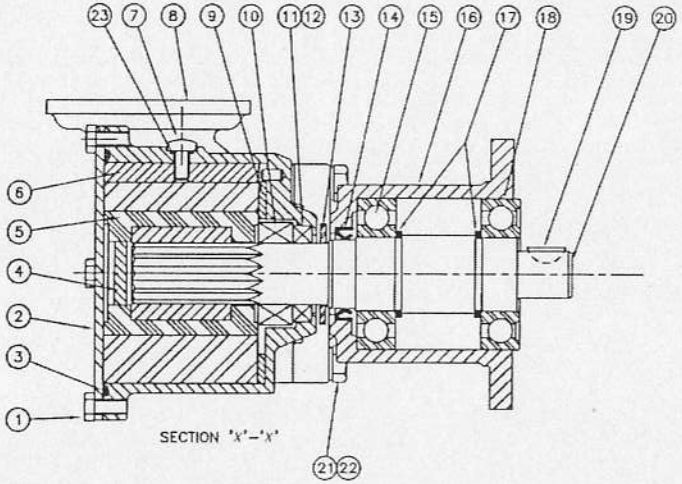

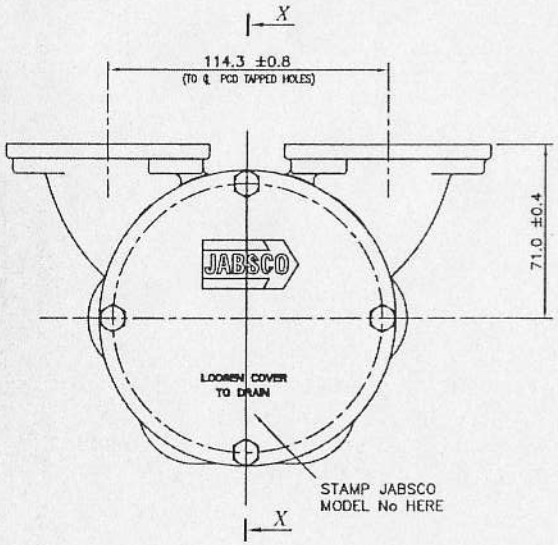

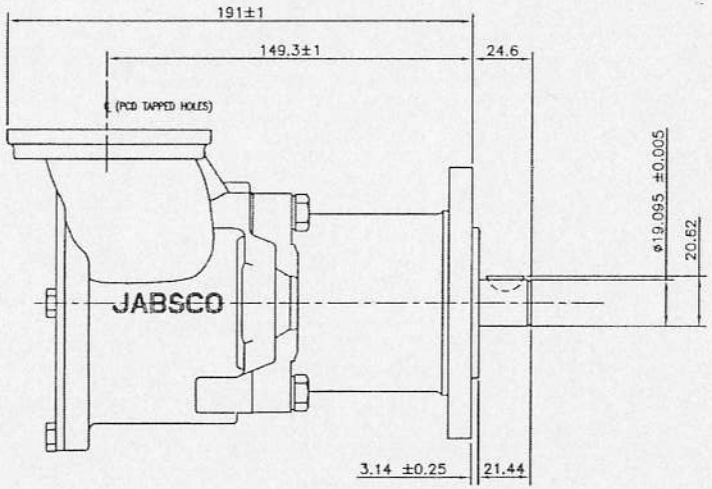

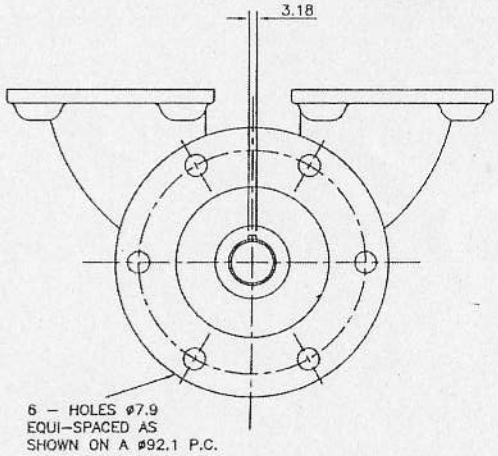

11790-0101

Depco Home

SIZE 200 (50 GALL) BRONZE FLANGE MOUNTED COMPOSITE PUMP

REV	CHANGE	DATE
A	ENGINEERING	3/12/03

NOTICE

THIS DRAWING WAS GENERATED & PROTECTED UPON THE DATE OF ISSUE ON WHICH PATENTS MAY BE GRANTED OR ISSUED. NEITHER THE DRAWING NOR ANY PART OF ITS CONTENTS THEREFROM MAY NOT FURNISHED WITHOUT THE WRITTEN PERMISSION OF ITT JABSCO

REMOVE BURRS, FINE FLASH & SCALE FROM CASTINGS, FORGINGS & MACHINED PART TO BE FREE OF BURRS. TOLERANCES UNLESS OTHERWISE STATED

LINEAR ± 0.5

ANGULAR ± –

PROJECTION

DO NOT SCALE – REPORT ERRORS

SCALE:	1:1	DATE
DRAWN	J N R	3/12/03
CHECKED		
APPROVED		

ITT Jabsco

HUDDERSFIELD HEATS ENGLAND

© 2003

MATERIAL: –

TITLE: INSTALLATION/ASSEMBLY

DRAWING NO.: 11790–0101

A1

9:\DWG_0001\SIZE200\ASSY\11790–0101