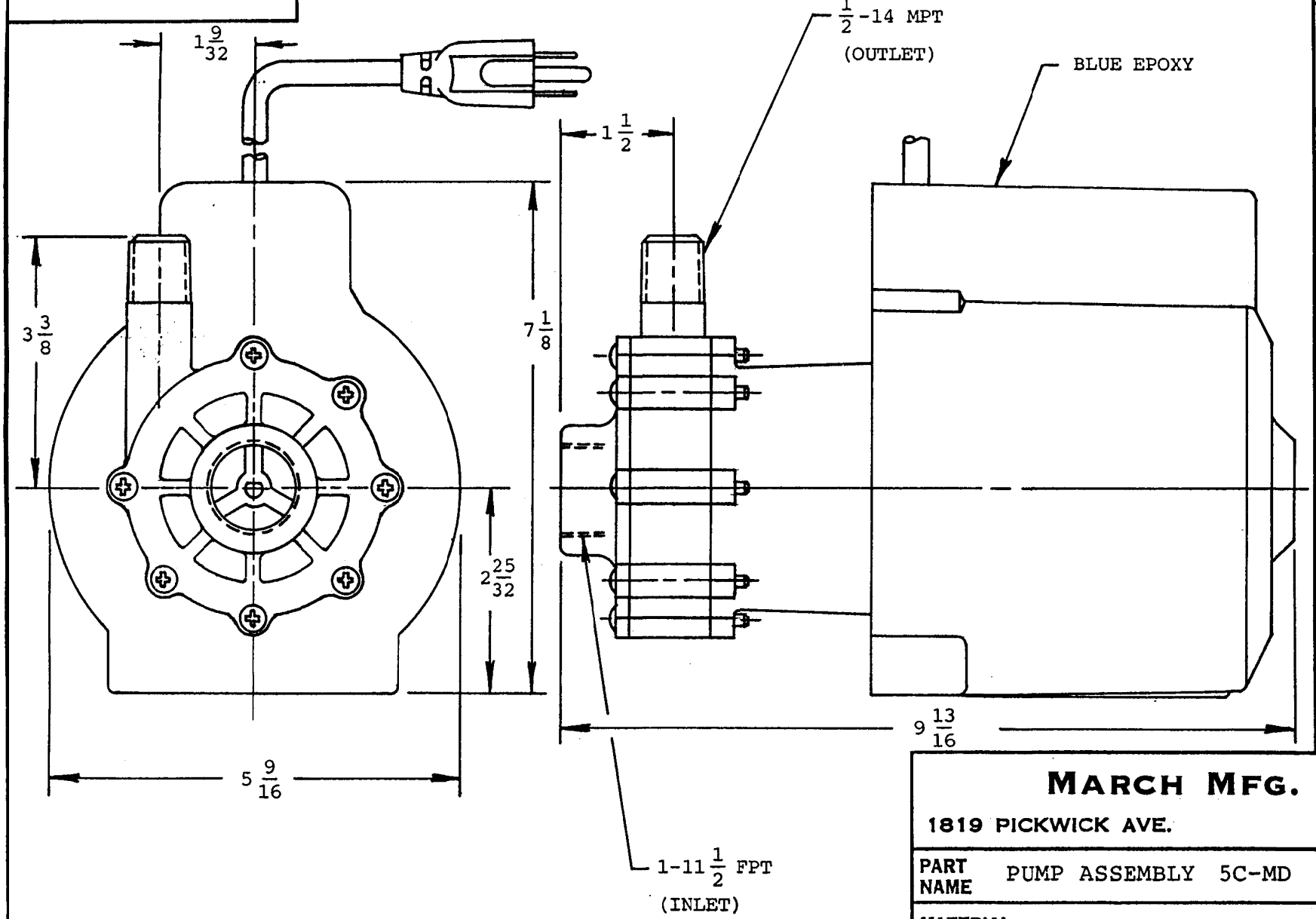


| QTY. | USED ON ASSEM. |
|---|---|
| | |
| | |
| | |
| | |

**MARCH MFG. INC.**

1819 PICKWICK AVE. GLENVIEW, IL.

| | | |
|---|---|---|
| PART NAME PUMP ASSEMBLY 5C-MD | | |
| MATERIAL | | |
| HEAT TRMT. | SCALE 1/2"=1" | QTY. REQ. 1 |
| FINISH | DRAWN JT/HZ | DATE 6-2-93 |
| UNLESS OTHERWISE NOTED TOLERANCE ON FRACTIONS TOLERANCE ON DECIMALS | CHECKED | |
| | APPROVED | |
| PART NUMBER 150 SERIES | | |

WITH PLUG 150-004-02 (115V 50/60HZ)

WITHOUT PLUG 150-004-04 (230V 50/60HZ)

THIS DOCUMENT DISCLOSED SUBJECT MATTER IN WHICH MARCH MFG. INC. HAS PROPRIETARY RIGHTS. NEITHER RECEIPT NOR POSSESSION THEREOF CONFERS OR TRANSFER ANY RIGHT TO REPRODUCE OR DISCLOSE THE DOCUMENT, ANY PART THEREOF, ANY INFORMATION CONTAINED THEREIN, OR ANY PHYSICAL ARTICLE OR DEVICE OR TO PRACTICE ANY METHOD OR PROCESS, EXCEPT BY WRITTEN PERMISSION FROM OR WRITTEN AGREEMENT WITH MARCH MFG. INC.