JOHNSON PUMP
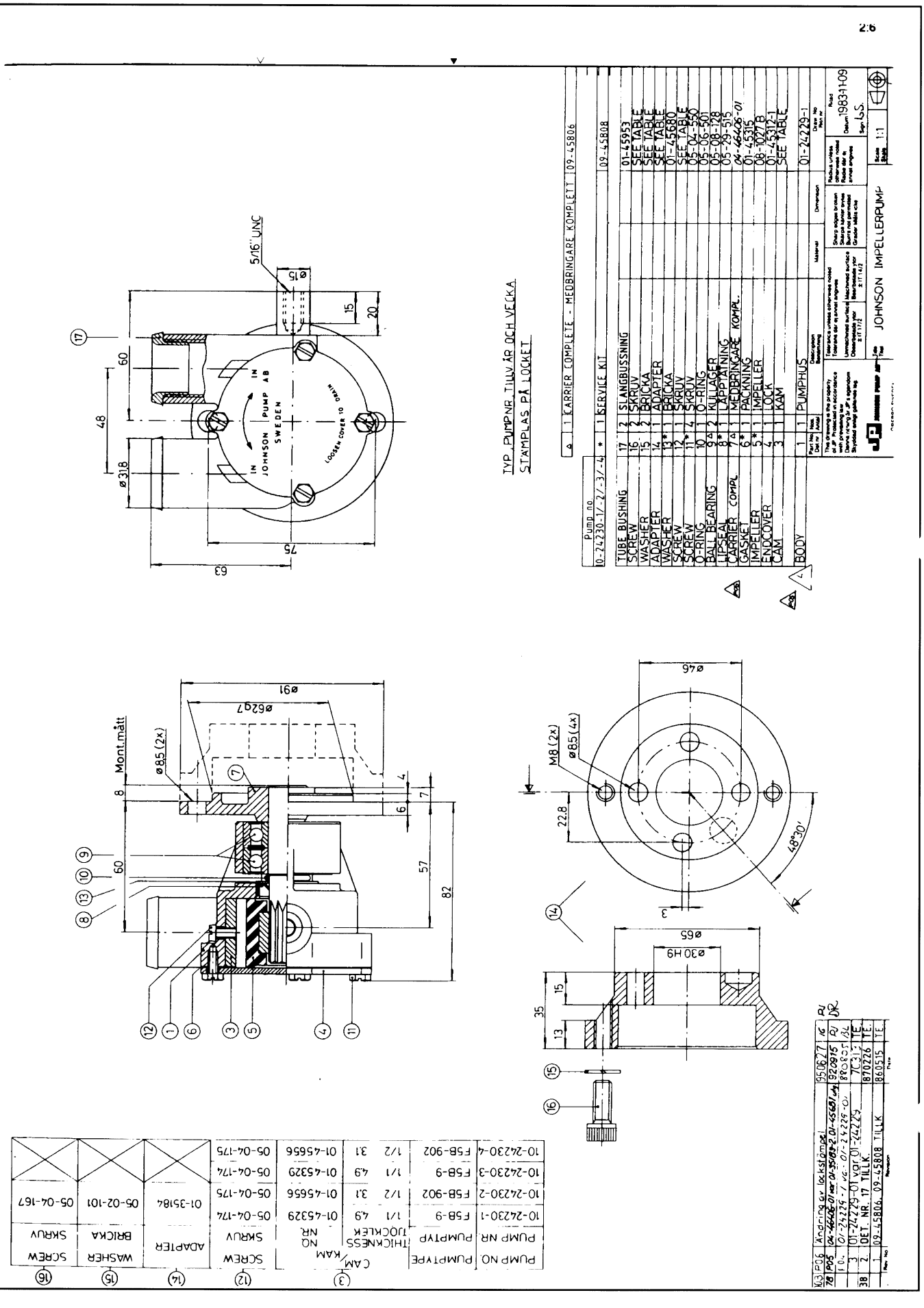
article number 10-24230 pump F5B-9