## 10-24159 pump F9B-9

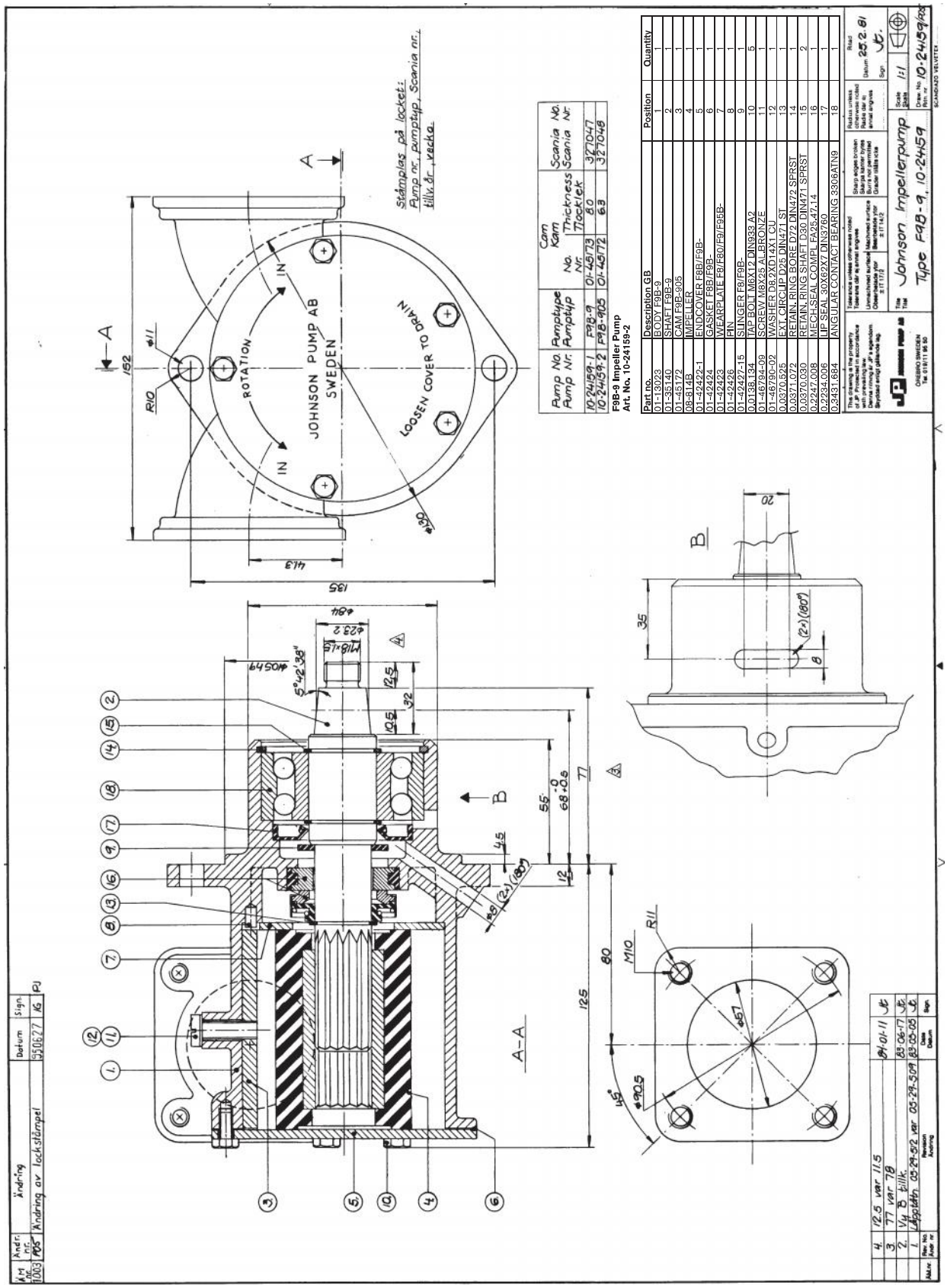


**F9B-9 Impeller Pump**
**Art. No. 10-24159-2**

| Part no. | Description GB | Position | Quantity |
|---|---|---|---|
| 01-13023 | BODY F9B-9 | 1 | 1 |
| 01-35140 | SHAFT F9B-9 | 2 | 1 |
| 01-45172 | CAM F9B-905 | 3 | 1 |
| 08-814B | IMPELLER | 4 | 1 |
| 01-42422-1 | ENDCOVER F8B/F9B- | 5 | 1 |
| 01-42424 | GASKET F8B/F9B- | 6 | 1 |
| 01-42423 | WEARPLATE F8/F8B/F9/F9B- | 7 | 1 |
| 01-42426 | PIN | 8 | 1 |
| 01-42427-15 | SLINGER F8/F9B- | 9 | 1 |
| 0.0138.134 | TAP BOLT M6X12 DIN933 A2 | 10 | 5 |
| 01-46794-09 | SCREW M8X25 ALBRONZE | 11 | 1 |
| 01-46790-02 | WASHER D8.2XD14X1 CU | 12 | 1 |
| 0.0370.525 | EXT. CIRCLIP D25 DIN471 ST | 13 | 1 |
| 0.0371.072 | RETAIN. RING BORE D72 DIN472 SPRST | 14 | 1 |
| 0.0370.030 | RETAIN. RING SHAFT D30 DIN471 SPRST | 15 | 2 |
| 0.2247.008 | MECH.SEAL COMPL FA25.47.14 | 16 | 1 |
| 0.2234.006 | LIP SEAL 30X62X7 DIN3760 | 17 | 1 |
| 0.3431.684 | ANGULAR CONTACT BEARING 3306ATN9 | 18 | 1 |