10-22096 pump F8B-9

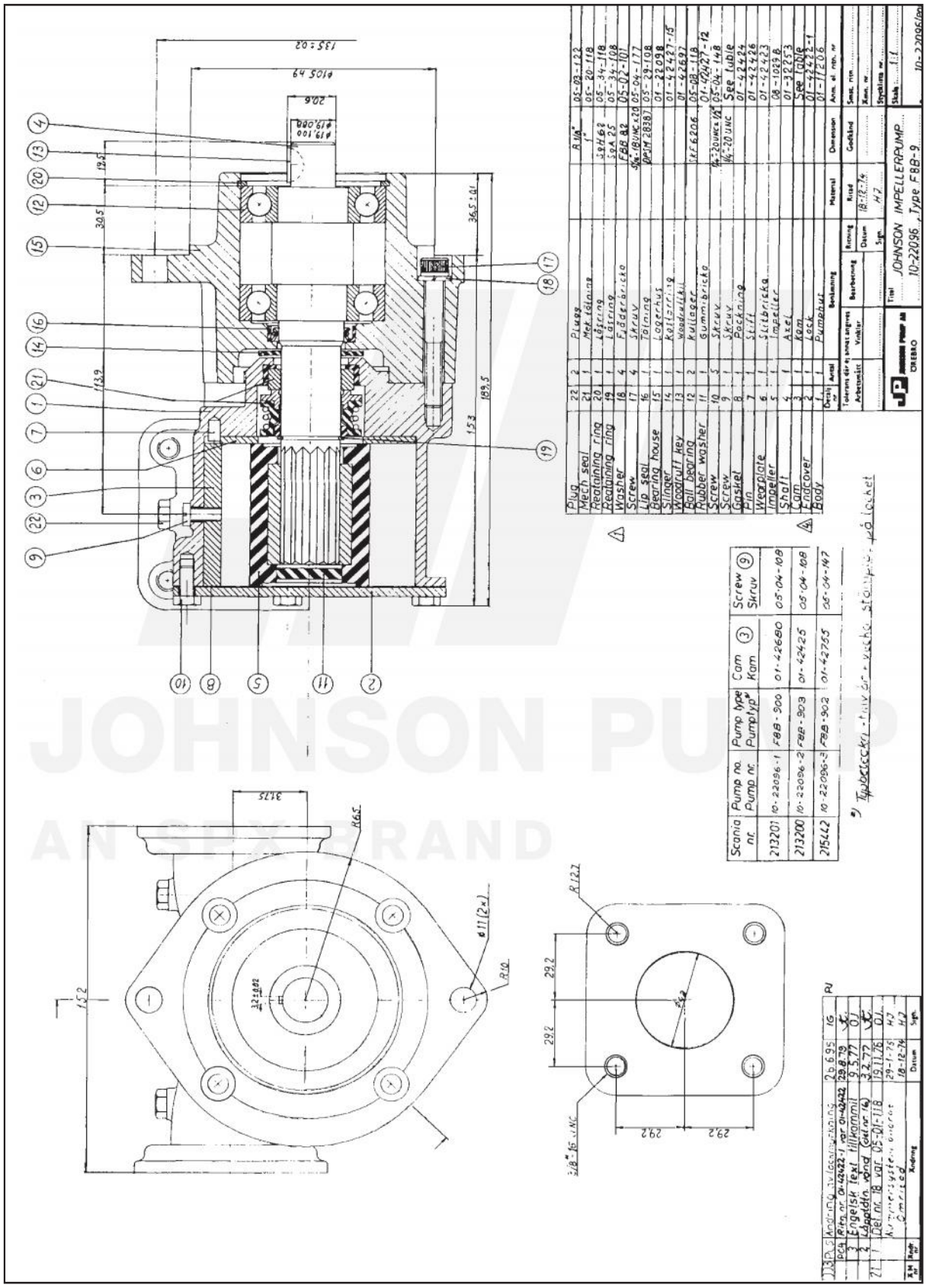

JOHNSON PUMP
AN SPX BRAND