10-13345 pump F6B-9

F6B-9 Impeller pump
Art. No. 10-13345-01

Part no.	Description GB	Position	Quantity
01-13194-3	BODY F6B-9	1	1
01-47104	SHAFT F6B-9	2	1
01-46556	END COVER F6B-9	3	1
08-812B-1	IMPELLER	4	1
0.2173.475	O-RING 57.6X2.4 SS1586 NBR70	5	1
0.2233.001	LIP SEAL 16X28X7 DPSM	6	1
0.3431.742	BALL BEARING 6203 2 RS1 ST	7	2
0.2173.402	O-RING 15.3X2.4 SS1586 NBR70	8	1
0.0370.017	EXT. CIRCLIP D17 DIN471 ST	9	1
0.0141.503	SCREW M5X12 ISO4017 (A4)	10	4
0.0371.040	RETAIN. RING BORE D40 DIN472 SPRST	11	1
0.2234.014	LIP SEAL 24X40X7 BAUMSLX7 FPM	12	1
01-42862	SPACER S200/500 HD	13	1
0.0633.708	PLUG TYPE 410050 D29.6MM DBI	0	2

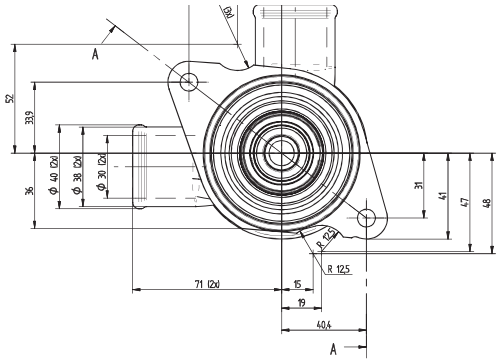

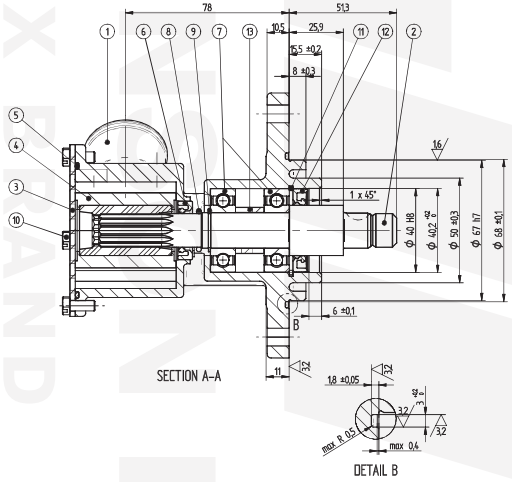

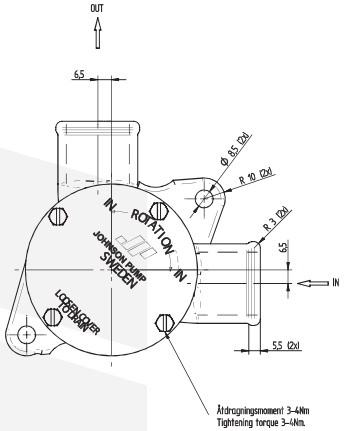

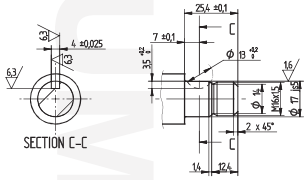

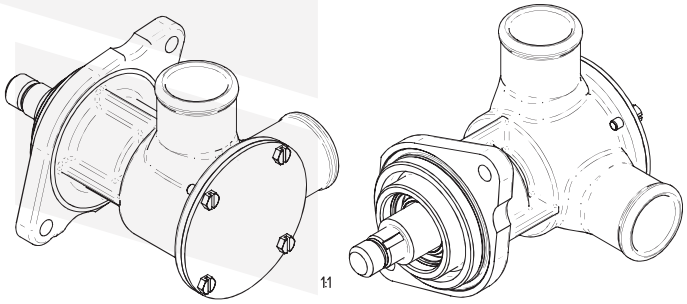

1:1

Rithning nr / Drawing no	Pump nr/ stycklista / Pump no/ parts list	Pump typ / Pump type	Märkning på lock / Mark on endcover
03-13345	10-13345-01	F6B-9	Pumptyp + pump nr + tillv. år + vecka Pump type + pump no + man. year + week

Detaljer enligt stycklista
Part nos according to parts list

Tolerances acc. to ISO Tolerances according to ISO		
Basic size Grundmått	Limits of deviation Gränsmått	
	Extra	Upper / Indre / Lower
Ø67 h7	0	-0,030
Ø40 H8	+0,039	0
Ø17 js5	+0,004	-0,004

UNLESS OTHERWISE STATED THE FOLLOWING APPLIES:
OMF EJ ANNAT ANGIVET GÄLLER:
NON TOLERANCED MACHINED FACES ACC. TO
EJVE TOLERANSSATTA YTOR ENLIGT:
ISO 2768 KLASS (TOLERANCE CLASS)
Ra in µm ISO 1302
SURFACE CODES: SYMBOLS
SYMBOL ÄNDTEX GRAVING
NAME MARKER
PALLET MÄRK MÅNADSMÄRKE

| | NAME NAMN | DATE DATUM | PROJECT OWNER PROJEKTÖVER | PROPERTY OF SPXFLOW, Johnson Pump AB
Impeller 08-812B-1 was 08-812B | 2405 |
|---|---|---|---|---|---|
| DRAWN | Jadupa | 050911 | 2724 | | |
| CHECKED | Tornerd | 05/09/12 | | STATUS In Work/Under Arbete | REFERENCE REFERS TO SPX |
| APPROVED | | | 10-2655 | | |
| MATERIAL | | | | TYPE / MARKER F6B-9 | SCALE / MAX 11 |
| | | | | | WEIGHT kg |

JOHNSON PUMP
JOHNSON PUMP AB, P.O. BOX 1436
MASTGATAN 19, SE-701 14 ÖREBRO, SWEDEN

DESCRIPTION JOHNSON IMPELLERPUMP F6B-9
JOHNSON IMPELLERPUMP F6B-9

DRAWING NUMBER/REVISION 03-13345 | SHEET/TOTAL P02

JOHNSON PUMP
AN SPX BRAND

The product, i.e. concept, design and construction, is the property of SPX Johnson Pump Marine AB