10-13088 pump F8B-9

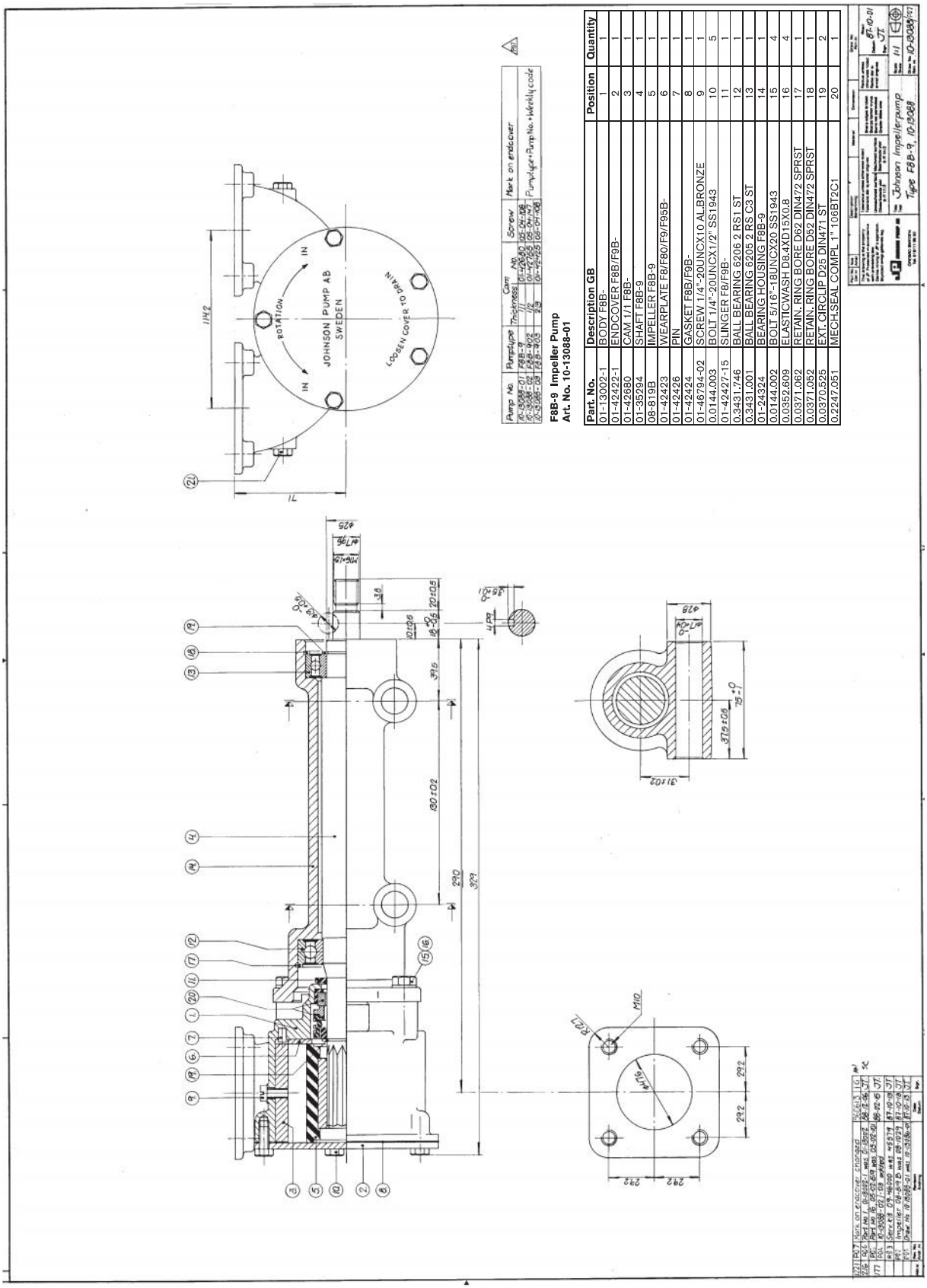

Pump No.	Pumptype	Thickness	Cam	Nb	Screw	Mark on endcover
10-13088-01	F8B-9	1/1	01-42680	02-04-08		
10-13088-02	F8B-902	1/2	01-42755	03-04-07		Pumptype+Pump No.+Weekly code
10-13088-03	F8B-903	2/3	01-42425	06-04-06		

F8B-9 Impeller Pump
Art. No. 10-13088-01

Part. No.	Description GB	Position	Quantity
01-13002-1	BODY F8B-	1	1
01-42422-1	ENDCOVER F8B/F9B-	2	1
01-42680	CAM 1/1 F8B-	3	1
01-35294	SHAFT F8B-9	4	1
08-619B	IMPELLER F8B-9	5	1
01-42423	WEARPLATE F8/F80/F9/F95B-	6	1
01-42426	PIN	7	1
01-42424	GASKET F8B/F9B-	8	1
01-46794-02	SCREW 1/4"-20UNCX10 AL.BRONZE	9	1
0.0144.003	BOLT 1/4"-20UNCX1/2" SS1943	10	5
01-42427-15	SLINGER F8/F9B-	11	1
0.3431.746	BALL BEARING 6206 2 RS1 ST	12	1
0.3431.001	BALL BEARING 6205 2 RS C3 ST	13	1
01-24324	BEARING HOUSING F8B-9	14	1
0.0144.002	BOLT 5/16"-18UNCX20 SS1943	15	4
0.0352.609	ELASTICWASH D8.4XD15X0.8	16	4
0.0371.062	RETAIN. RING BORE D62 DIN472 SPRST	17	1
0.0371.052	RETAIN. RING BORE D52 DIN472 SPRST	18	1
0.0370.525	EXT. CIRCLIP D25 DIN471 ST	19	2
0.2247.051	MECH.SEAL COMPL.1"-106BT2C1	20	1

The product, i.e. concept, design and construction, is the property of SPX Johnson Pump Marine AB