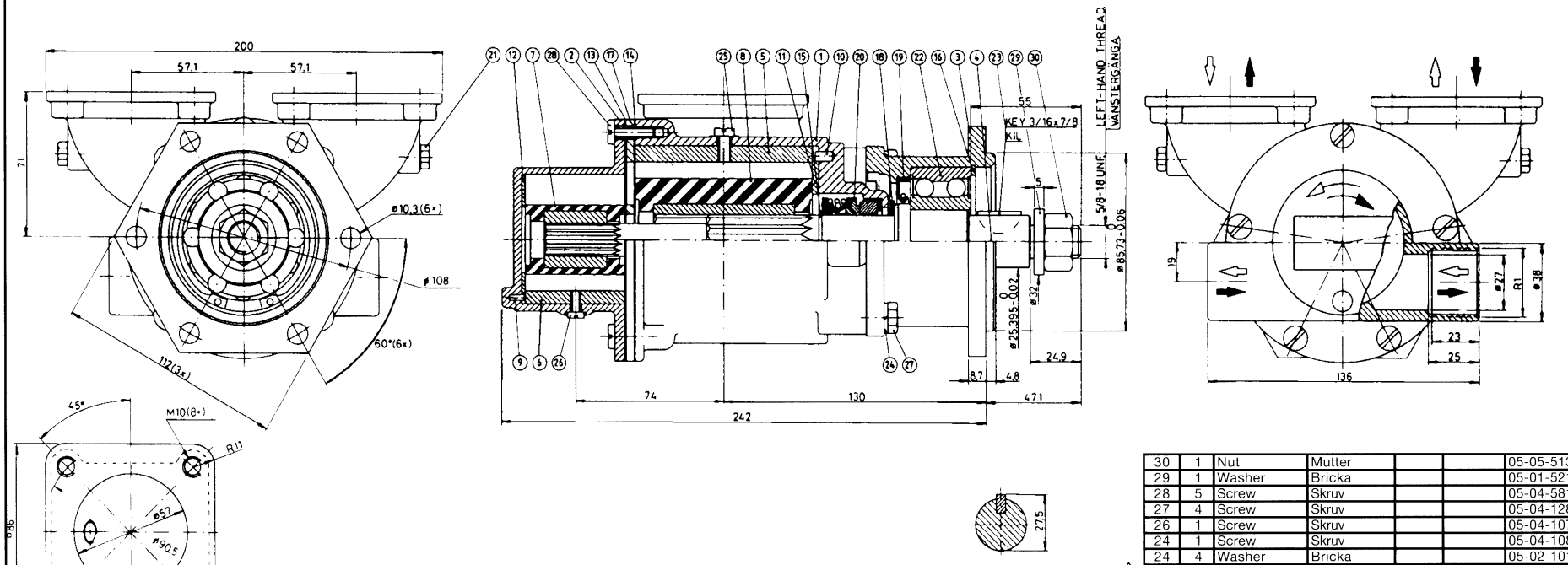


| Pump nr<br>Pump no | Pump typ<br>Pump type | Märkning på pumphus<br>Marking on body (2) |
|---|---|---|
| 10-13064-1 | F7B/F9B-9 | Pump typ = 50.06500-7012 = tillv. år + vecko<br>Pump type = 50.06500-7012 = man. year + week |
| 10-13064-2 | F7B/F9B-9 | Pump typ = Pump nr = tillv. år + vecko<br>Pump type = Pump no = man. year + week |

| Pos. | Qty. | Description | Beskrivning | Materia | Dimensio | Drawing no. |
|---|---|---|---|---|---|---|
| 30 | 1 | Nut | Mutter | | | 05-05-513 |
| 29 | 1 | Washer | Bricka | | | 05-01-521 |
| 28 | 5 | Screw | Skruv | | | 05-04-581 |
| 27 | 4 | Screw | Skruv | | | 05-04-128 |
| 26 | 1 | Screw | Skruv | | | 05-04-107 |
| 24 | 1 | Screw | Skruv | | | 05-04-108 |
| 24 | 4 | Washer | Bricka | | | 05-02-101 |
| 23 | 1 | Key | Kil | | | 01-46352 |
| 22 | 1 | Ball bearing | Kullager | | | 05-08-509 |
| 21 | 2 | Plug | Plugg | | | 05-03-122 |
| 20 | 1 | Mech. seal | Mek. tätning | | | 05-20-118 |
| 19 | 1 | Lip seal | Läpptätning | | | 05-29-517 |
| 18 | 1 | Slinger | Kastrring | | | 01-42427-15 |
| 17 | 1 | Washer | Mellanbricka | | | 01-45755 |
| 16 | 1 | Retaining ring | Låsring | | | 05-34-502 |
| 15 | 1 | Retaining ring | Låsring | | | 05-34-108 |
| 14 | 1 | Gasket | Packning | | | 01-42424 |
| 13 | 1 | Gasket | Packning | | | 01-45758 |
| 12 | 1 | Wear plate | Slitbricka | | | 01-42443 |
| 11 | 1 | Wear plate | Slitbricka | | | 01-42423 |
| 10 | 1 | Pin | Stift | | | 01-42426 |
| 9 | 1 | Pin | Stift | | | 01-42400 |
| 8 | 1 | Impeller | Impeller | | | 08-802B |
| 7 | 1 | Impeller | Impeller | | | 08-1028B |
| 6 | 1 | Cam | Kam | | | 01-42679 |
| 5 | 1 | Cam | Kam | | | 01-43137 |
| 4 | 1 | Shaft | Axel | | | 01-35214 |
| 3 | 1 | Bearing house | Lagerhus | | | 01-24246 |
| 2 | 1 | Body | Pumphus | | | 01-24245 |
| 1 | 1 | Body | Pumphus | | | 01-13003 |

| | | | | |
|---|---|---|---|---|
| P04 | Änderung [illegible] | 950.22 | 16 | RJ |
| P03 | Märkning vas 10-13064-1<br>10-13064-2 ändrad | 921012 | RJ | DR |
| [illegible] | Key [illegible] 1-46352 | | AS | RJ |
| | Ballbearing 05.08.509 was 05.08.505 | 85.06-04 | [illegible] | |

Tolerans där ej annat angivas
Arbetsmärkt | Vinkler | Bearbetning | Ritning | Ritad | Godkänd | Snitt. nr.
Datum 84-04-25
Sign L.S.
Rätt. nr.
Ingrediens nr.
Titel JOHNSON IMPELLERPUMP F7B/F9B
Skala 1:1
10-13064

article number 10-13064 pump F7B/F9B

JOHNSON PUMP

Engine cooling