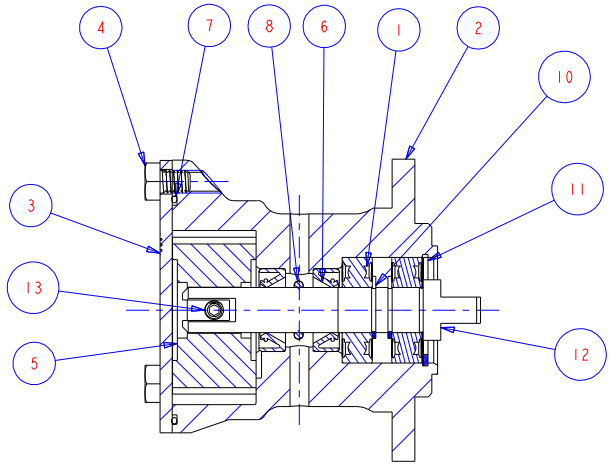

SECTION X-X

KEY	DESCRIPTION	PART NUMBER	QTY
1	BEARING - BALL	SP2601-0457	2
2	BODY 020 (FULL CAM)	29454-1301	1
3	END COVER	29405-0000	1
4	HEX HEAD SCREW	X3001-174F	3
5	IMPELLER 020	18653-0111	1
6	LIPSEAL	SP2701-1006	2
7	O RING (1.78 x 56.87)	X5251-049	1
8	O RING (2.4 x 10.6)	X4020-210A	1
9	RETAINING CLIP	22466-0100	2
10	RETAINING RING - EXTERNAL	SP1701-4440	2
11	RETAINING RING - INTERNAL	SP1701-4438	1
12	SHAFT 020	29467-0020	1
13	SOCKET SET SCREW	SP1010-06	1

NOTE
ITEM 9 RETAINING CLIPS NOT SHOWN
TO BE PACKED WITH PUMP

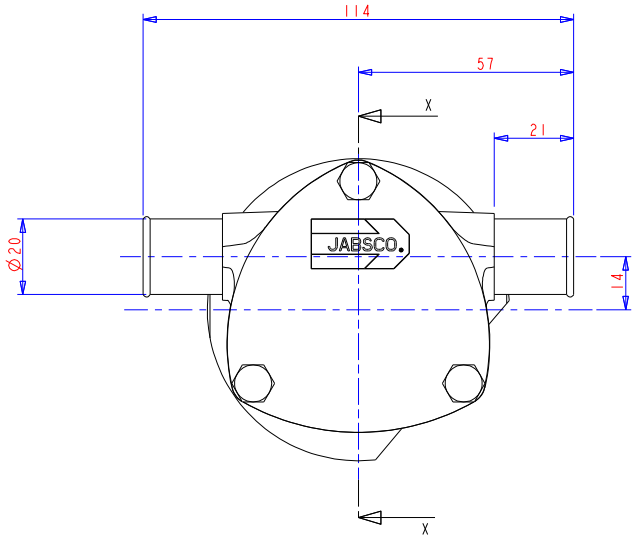

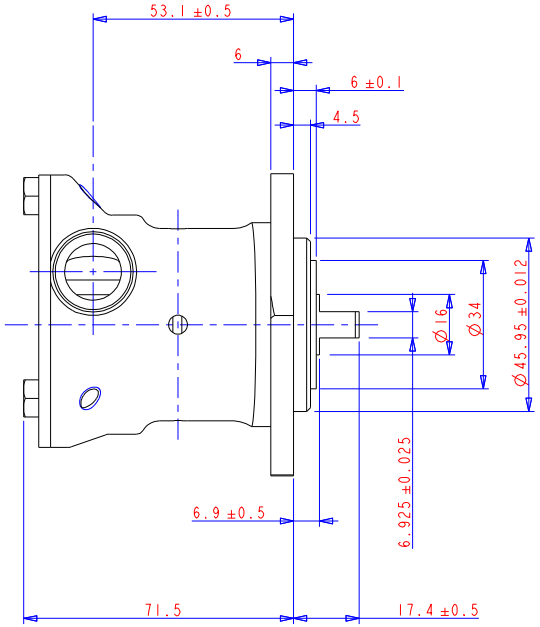

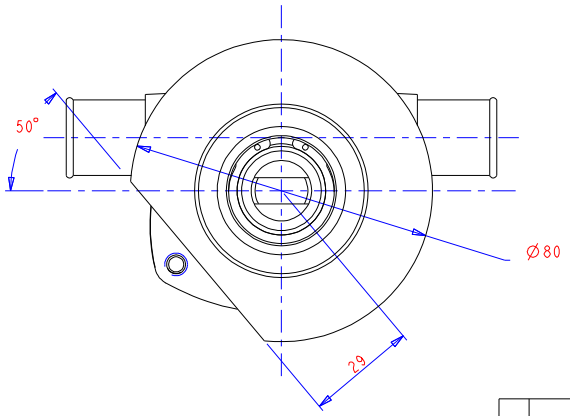

ISSUE	ECN No.	DATE
A	003143	17/07/08

Jabsco
ITT Industries
BINGLEY ROAD, HODDESDON
HERTS, EN11 0BU.ENGLAND
(0)1992 450145
www.jabsco.com

UNLESS OTHERWISE STATED DIMENSIONS ARE IN MM
TOLERANCES UNLESS OTHERWISE STATED ARE:
DECIMALS
X. ±
X.X ±
X.XX ±
ANGULAR ± °

THIS DOCUMENT IS THE CONFIDENTIAL AND PROPRIETARY PROPERTY OF ITT INDUSTRIES JABSCO AND MAY NOT BE COPIED OR REPRODUCED, IN WHOLE OR IN PART, IN ANY MANNER WITHOUT THE EXPRESS WRITTEN PERMISSION OF ITT INDUSTRIES JABSCO.

SCALE: 1.000		MATERIAL: -	
DRAWN J. ROUSE	9/10/01	TITLE: INSTALLATION / ASSEMBLY	© 2002
CHKD/APPD D. MEHEW	17/07/08	DRAWING NO.: 29460-1701	A2