HAIGHT PUMPS
DIVISION OF: BAKER MANUFACTURING COMPANY

133 Enterprise Street • Evansville, WI 53536
Phone: 800-871-9250 • Fax: 608-882-3777

Footed Bracket for Base Mounting for 44-80 GPm Haight Double Pumps

Bracket

SIZE	D	A	B	E	F	H	J	K
H182	4-1/2	9-5/16	3-9/16	3-3/4	1-7/8	11/16	7/8	13/32
H213	5-1/4	10	3-1/2	4-1/4	1-7/8	1/2	7/8	13/32
H254	6-1/4	12-1/8	4-5/8	5	1-1/2	11/16	1-1/16	17/32

Bracket sizes coincide with NEMA motor frame designations

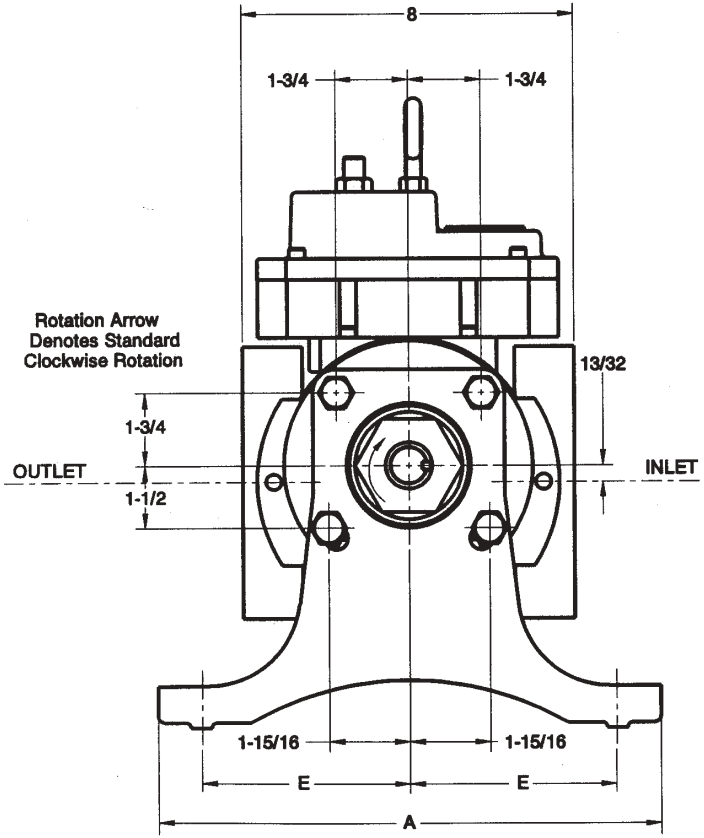

SHAFT END VIEW

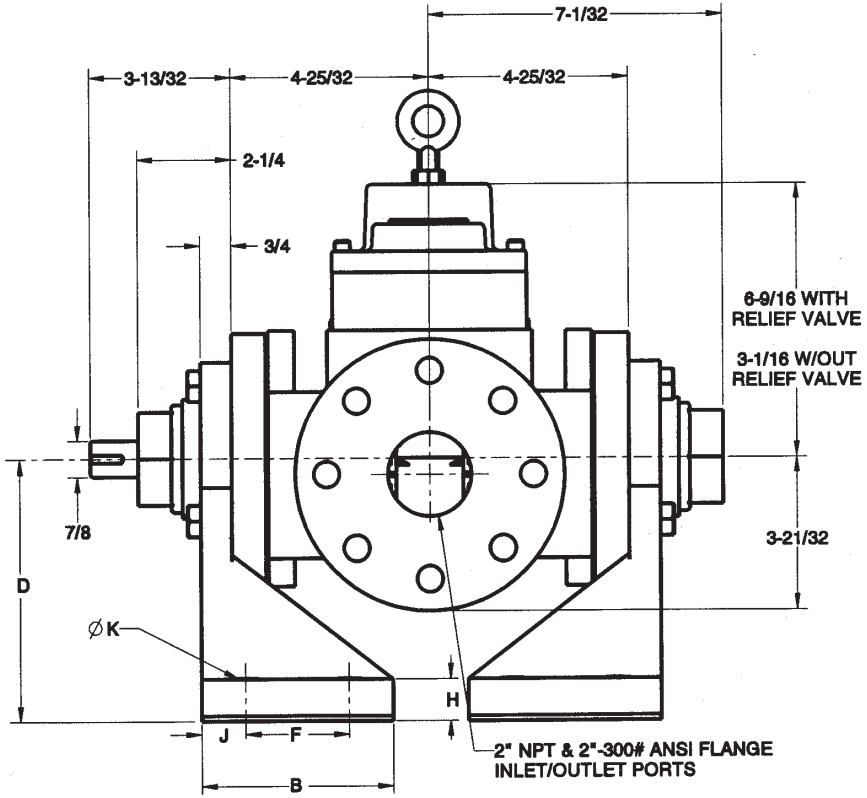

RIGHT SIDE VIEW

Footed Bracket for Base Mounting for 44-80 GPM Haight Double Pumps

(Revised 3-1-03)