CAD generated and maintained drawing. All printed and electronic copies outside of Griswold's engineering database are **"Uncontrolled"** and shall be used for reference only.

REV.	DESCRIPTION	BY	APP.	DATE
A	1.5 X 1 – 8 AA ANSI ASSEMBLY	M.H.		

NOTES: UNLESS OTHERWISE SPECIFIED

1. DIMENSIONS AND TOLERANCES PER ANSI Y14.5M–1982.
2. * INDICATES DIMENSIONS AND/OR FEATURES MODIFIED ON CURRENT REVISION LEVEL.
3. *THIS PUMP MAY HAVE TAPPED BOLT HOLES IN THE DISCHARGE FLANGE PER ANSI'S ALLOWANCE.

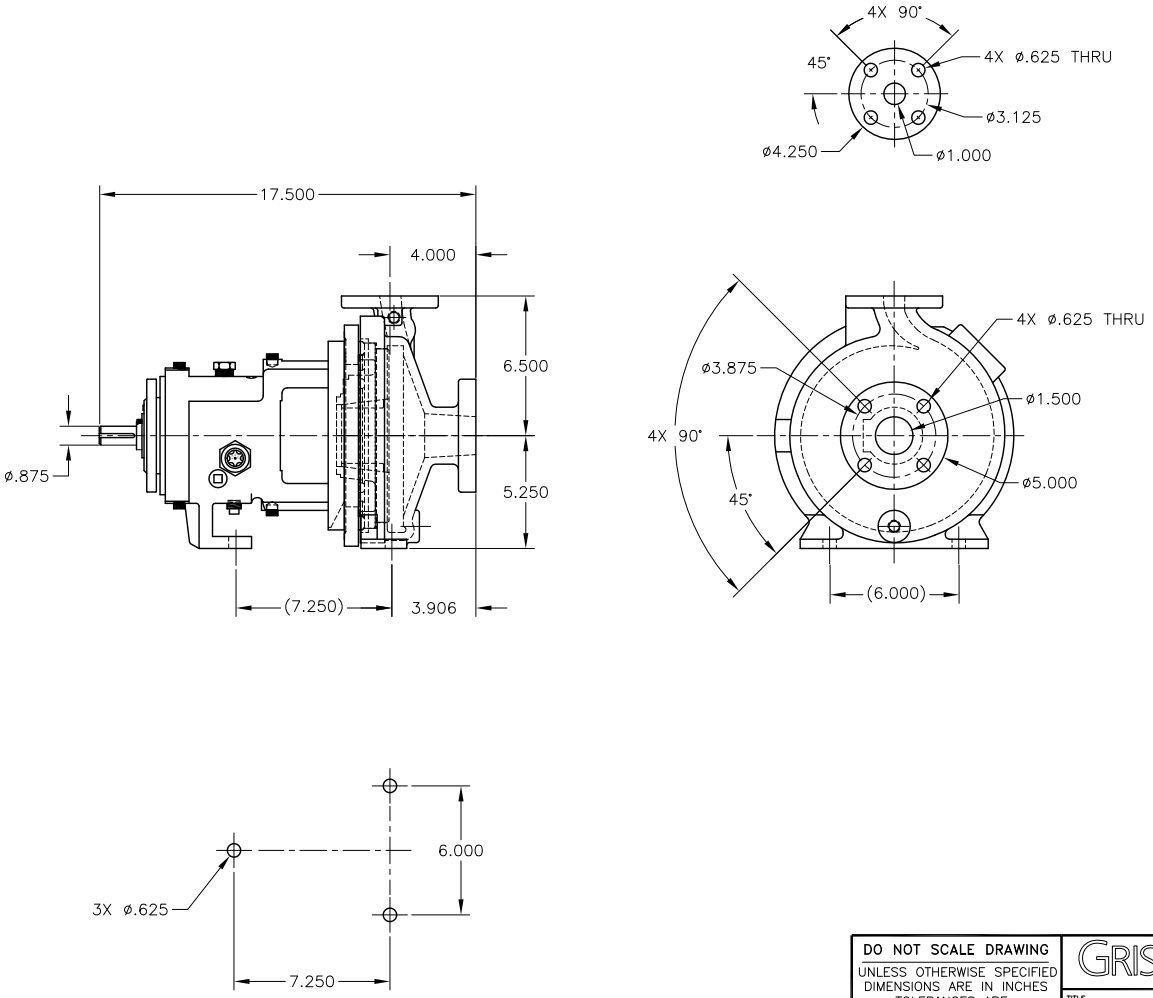

THIS DOCUMENT AND ITS CONTENTS ARE PROPRIETARY TO WILDEN PUMP AND ENGINEERING CO. ANY REPRODUCTION, DISCLOSURE OR USE OF THIS DOCUMENT IS EXPRESSLY PROHIBITED EXCEPT AS OTHERWISE AGREED TO IN WRITING.

DO NOT SCALE DRAWING

UNLESS OTHERWISE SPECIFIED DIMENSIONS ARE IN INCHES TOLERANCES ARE:

FRACTIONS	± –
DECIMALS .XX	± –
.XXX	± –
ANGLES	± –

SCALE 1/1 SHEET 1 OF 1

GRISWOLD PUMP COMPANY
22060 VAN BUREN ST.
GRAND TERRACE, CA 92313
PHONE: (800) 843-9222, FAX: (800) 752-2929

TITLE ASSEMBLY, 1.5 x 1–8 AA ANSI

DRAWN BY M. HIATT	DATE 04/09/08	ASSY. NO.	
CHECKED BY	DATE	DRAWING NO. 1.518AA	REV. A
APPROVED BY	DATE		