Fig. 3062

Basic Pump Standard and Optional Equipment
AA6, AB6, AA8, AB8 - Bulletin 3060

DEMING®

www.cranepumps.com

Chemical & Process ANSI Pumps

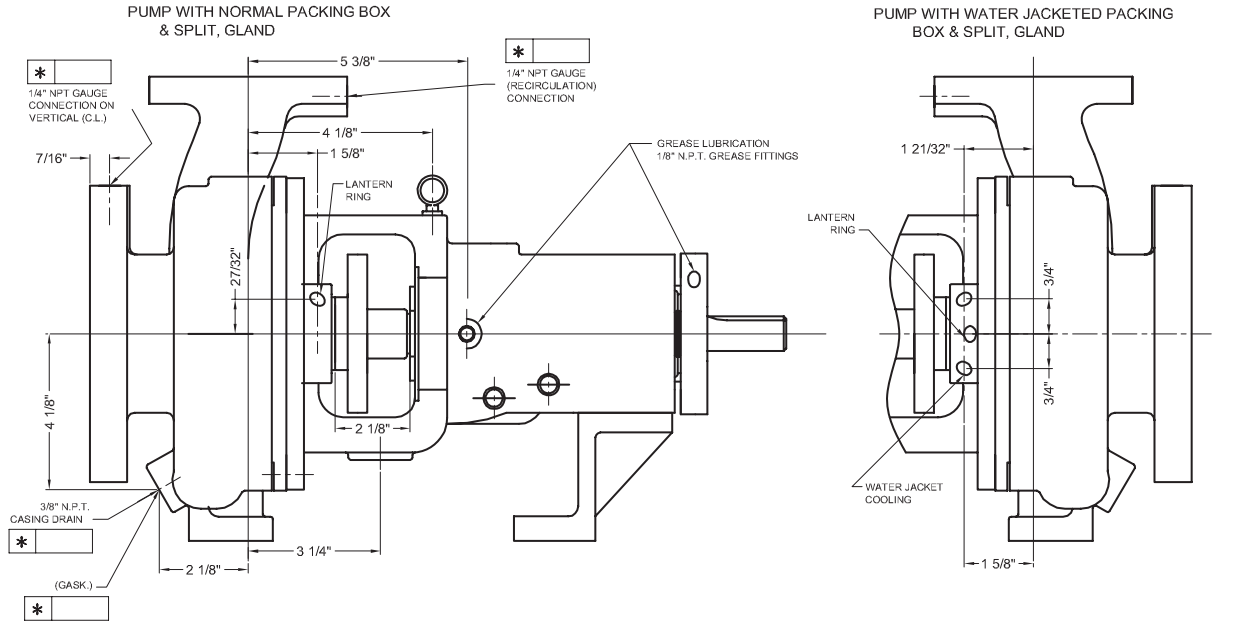

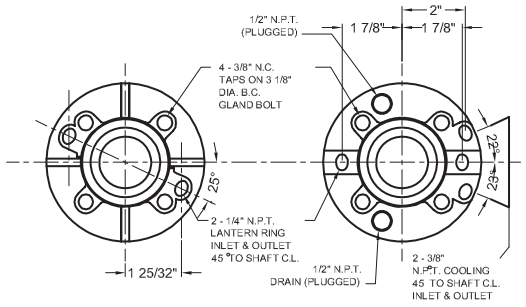

STANDARD PACKING BOX

WATER JACKETED PACKING BOX

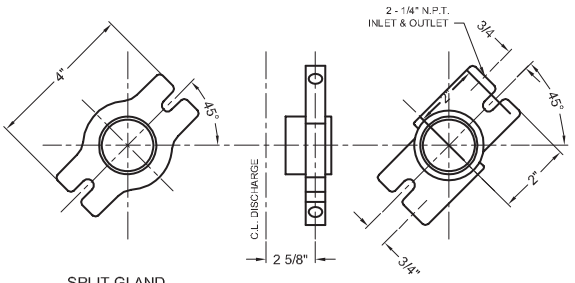

SPLIT GLAND

SNUFFING GLAND

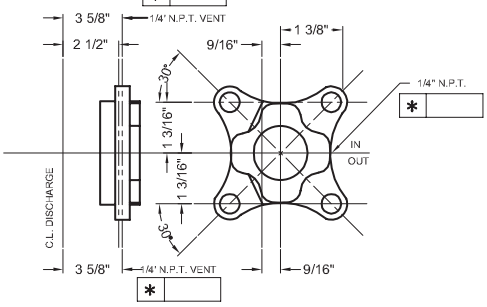

SEAL GLAND
("O" RING SEAT)

NOTE:

FURNISHED IF CHECKED

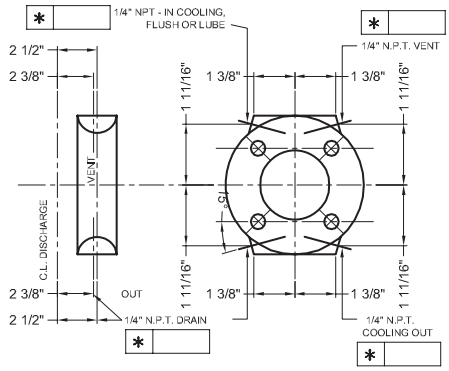

SEAL GLAND
(CLAMPED SEAT)

Customer				Shop Order No.			Date:		By:	
Pump Data	Fig. No.	Size	Curve No.	GPM	Head	Sp. Gr.	Temp.	Rotation	Packing/Seal	
Motor Data	MFGR	Hp	RPM	Phase-Cycle Voltage		Frame	Enclosure	Insulation	Furnished by	Mounted

CRANE®
A Crane Co. Company

PUMPS & SYSTEMS

USA: (937) 778-8947 • Canada: (905) 457-6223 • International: (937) 615-3598